THE MODERN ORGAN

by

Karl A. Krueger

A thesis submitted to the Department of Music and the Faculty of the Graduate School in partial fulfillment of the requirements for the Master's Degree.

Charles S. Skilton

Department of Music.

BIBLIOGRAPHY.

The Art of Organ Building--G. A. Audsley.
(Dodd, Mead and Company, N. Y.)

L'Orgue Moderne--Alexender Cellier
(Libraire Ch. Delagrave, Paris)

The Recent Revolution in Organ Building.
George L. Miller
(Charles Francis Press, N. Y.)

Dictionary of Organ Stops--J. I. Wedgwood.
(Vincent Music Company, London)

Orgelhistorie--Sponsel

Johann Sebastian Bach: The Organist and his Works for the Organ--A. Pirro.
(Schirmer, N. Y.)

OUTLINE.

I. Introduction.

1. Purpose of thesis.

2. General Plan.

3. Scope.

II. Historical Survey.

1. Most ancient percursors of the organ. (?--200B. C.)

a. Syrinx of the Greeks.

b. Pipes of the Egyptians, with lateral holes.

c. Cheng of the Chinese.

d. Mashrokitha of Daniel (?)

e. Bagpipe of Greeks.

2. Earliest works of the true organ type. (200 B. C.--476 A.D.)

a. Hydraulic organ of Ctesibius (200 B. C.)

b. Hydraulic organ of Vitruvius (25 B. C.)

1' Used as late as 826 A. D.

c. Pneumatic Organ.

1' Used at same time as later hydraulics.

2' Earliest one built by Theodosius the Great (A.D. 346-395)

3' Used first in places of amusement only; later in church.

3. The organ during the middle ages (476-1470 A. D.)

a. First German and French Organs imported from Byzantium.

b. Organ building an established industry in France and Germany before the end of the 9th century.

c. The organs built in Munich and Magdeburg first large

works.

d. England not much behind Germany and France in organ building.

e. Very primitive state of organ in 11th century.

f. Improvements of the 12th century.

1' Number of keys increased.

2' Mixtures introduced.

g. Condition of the organ in the 13th century.

1' Check at hands of Latin and Greek Churches.

2' Introduction of Regals and Portatives.

h. State of organ during 14th and 15th centuries.

1' Chromatic tones added, keys made smaller.

2' Introduction of weighted bellows.

3' Prevalence of Regals and Portatives.

4. The organ from the Invention of the Pedal to the Present

a. Organ during 15th and 16th centuries.

1' Pedal invented 1470.

2' Plurality of wind chests and keyboards.

3' Separation of foundation stops from the compound stops.

4' Keys made small enough for an octave to be grasped by one hand. 1499

5' Increased compass of manuals and pedal.

6' Introduction of Rückpositiv.

7' Addition of Spitzflöte and Reeds.

b. Organ during the 17th and 18th Centuries--the commencement of the epoch of the art in which we are still working.

1' Bellows improved and wind supply made more certain.

2' New stops--Voxangelica and Vox Humana--were added.

3' Improved voicing.

4' Elaborate cases.

5' Invention of swell organ. 1712.

6' The work of Silbermann.

7' Fine works in Holland, the Netherlands and Belgium.

8' Excellent progress in France.

9' Satisfactory in Spain and Italy.

10' England backward during 17th century, but progressive during the 18th century.

11' Harris and "Father Smith."

12' Invention of Swell shutters by Green.

13' Invention of compound horizontal bellows. 1762

c. Organ during the 19th century.

1' Primitive condition of instrument at the opening of the century.

2' Invention of pneumatic lever. 1832.

3' Invention of tubular pneumatic action. 1835.

4' Invention of electro-pneumatic action. 1866

5' Hope-Jones' improvements in the organ tone and his mechanical inventions. 1886.--

III. Discussion of the Modern Organ.

1. Two conceptions of the organ and two kinds of builders.

2. The work of Hope-Jones.

3. The organ as it exists today.

a. Action.

b. Console.

1' Need for uniformity.

2' Tilted manual claviers.

3' Disposition of manuals.

4' Double touch keyboards.

5' Pedal clavier.

6' Stop keys.

7' Need for systematic stop nomenclature.

8' Extension of swell pedal.

c. Tonal appointment of the Pedal organ.

1' Borrowing and duplication.

d. Mixtures in the organ.

e. Methods of Furnishing air to the organ.

f. The organ case.

THE MODERN ORGAN

I. Introduction

1. The purpose: It shall be the aim of this thesis to trace the evolution of the organ as an instrument from its most primitive beginnings to its present highly complicated state; to present a comparison of the mechanical and tonal resources of different forms of the organ; and to discuss various details of organ construction, pointing out suggested changes, whose object it is to render the organ a grander, more adequate and flexible instrument.
2. General Plan: This shall include: (1) A historical survey of the organ; (2) A discussion of the modern organ.
3. Scope: Owing to the vast limits of an exhaustive historical study of the organ our discussion of this subject must be limited and since the organist is concerned with the organ builder's product, rather than with his methods, we shall touch upon the details of the processes involved in the building of an organ, only then when it is absolutely necessary for the sake of clearness. It is assumed that the organist is acquainted with the essential parts of an organ and their workings. For the uninitiated, we shall briefly state that the pipes of the organ which emit the sounds, are placed on chests containing compressed air. At the base or feet of the pipes are valves or pallets which control the entrance of air into the pipes. These pallets are operated by the organ "action", which is the means of communication between the keys, under the fingers of the player, and the pallets. This "action" may consist entirely of mechanical levers, or it may use the help of compressed air in tubes or electricity. When the organist presses a key on the organ keyboard (manual) he is

simply opening one of these pallets, which admits air from the wind chest into the pipes. The compressed air in the wind chest is furnished by a blowing apparatus in which hand, electrical, or water power is used. The console is the desk from which the organist controls the instrument. It contains the key board and the stop registers. A stop is the unit which the organ is composed. It consists of a set of kindred pipes. There is one pipe for each key of the keyboard of the division in which the stop is placed and all the pipes are of exactly the same timbre, and are arranged in a regular series as regards pitch. Each division of the organ--great, swell, choir, solo and echo--contains a number of these "stops", which are controlled by the stop registers.

II HISTORICAL SURVEY

Because of its very complexity, the history of the organ is often shrouded in mists of uncertainty. The organ may be compared to a magnificent temple, whose different parts are brot from all the corners of the earth and then assembled in intelligent, beauteous unity. Thus it stands thru the ages while generations come and disappear, each leaving its impress on the temple, seeking to add to its majesty and splendor; and so with the organ: first we had the flutes of the ancient world; then the comception in man's mind, of an instrument by means of which one man could play many instruments; and finally came the centuries of patient toil to bring about the fulfillment of the idea. Each country, each generation, brot its gift to this King

of Musical Instruments.

The organ cannot be said to have been invented. It was evolved from the first reed pipe or whistle blown by the breath of man. In Genesis 1V, 21, we find mention of Jubal who "is the father of all such as handle the harp and the organ." It was early discovered that pipes of different lengths yielded tones of different pitches. This brot about attempts at making instruments in which several pipes or reeds, stopped at one end, were bound together so as to yield a more or less regular series of sounds, in swift succession or simultaneously. This creation was commonly known as the "Pipes of Pan" or Syrinx. (Fig. 1)

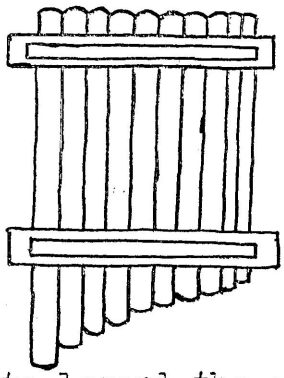

Fig. I.

According to legend the origin of the Syrinx was ascribed to Pan: Syrinx, a lovely water nymph of Arcadia, daughter of Ladon the river god, was beloved of Pan. Not reciprocating his passion and wishing to escape from his importunities, she fled to her sisters and sought their aid. They promptly changed her into a reed. Pan, still infatuated, possessed himself of the reed and cut it into seven (some say nine) pieces, joined them together in ever decreasing lengths, thus forming the instrument bearing the name of his beloved. Be this legend ever as imaginative, yet there can be no doubt of the great antiquity of this instrument.

It was the true percursor of the organ, because here is made for the first time, the attempt to combine several instruments in such a way that they might be handled by one person. The Syrinx is mentioned in Homer's Iliad and in the Hymn to Mercury. Theocritus represents it in his Idyllia figurata as having ten reeds. Virgil wrote that seven reeds were used for the Syrinx, joined together with wax. An Etruscan bas relief shows nine reeds. The pipes were made of reed, bone, ivory, metal, wood and horn. Representations of these long pipes of reeds and flutes have been found in Egyptian paintings, and sculptures, and specimens have been excavated from Egyptain tombs. Three pipers were found together in the tomb of Tebhen (2050 B. C.) whose pipes were of such unequal lengths that they must have been playing treble, tenor and bass.

The Syrinx was unknown to the Egyptians. Since its chief object was the attainment of a scale of sounds, by cutting the reeds into varying lengths, it is probable that the Egyptians did not need the Syrinx because they had achieved the same end by different means, viz, the cutting of lateral holes in the pipes. It may even be said that they despised the humbler and more primitive Syrinx. The Hebrews and Chinese, however, knew the Syrinx. "The Cheng of the Chinese is the most ancient species of organ, with which we are exactly acquainted "(Engel) This instrument had the appearance of a coffee pot covered with pipes. It consisted of a small wind chest, the shape of an egg, usually made of wood, hollowed out, or from a gourd. From

its side projects a tube or mouth piece, against which the lips are placed while supplying it with compressed air. On the flat surface of the wind-chest are placed the pipes or tubes containing free reeds or vibrating tongues of metal. Usually they were from seventeen to twenty four in number. When of seventeen tubes, thirteen were speaking pipes, the remaining tubes being used as supports. No pipe could speak unless the lateral hole near its lower end was closed. It was tuned according to the pentatonic and chromatic scales. Beyond the cheng, the Chinese made no attempts to construct an instrument of the organ class. The cheng was also popular in Japan and similar to the "heen" of Burmah and Siam.

It is not known definitely whether the organ, in a primitive form was known to the Jews or not. Father Kircher, writing in the 17th century contended that Daniel, (580 B. C.) in his 3rd chapter, referred to the organ when he used the Chaldee word "mashrokitha" in the description of the music at the worship of the golden image which Nebuchadnezzar had set up. Father Kircher giwes a drawing of the mashrokitha or magraketha of the Chaldee orchestra, as he conceived it. Audsley is convinced that Father Kircher got his information from his imagination, and that no such instrument as he describes existed in the time of Daniel. However, these various instruments enumerated go to show how early a knowledge of the fabrication of musical instruments, from reeds and straws was attained.

Just when the first attempts were made to construct a

compound instrument of the organ type is not known. Instruments of the true organ type we shall designate as those in which the pipes or groups of pipes are sounded by the air, which rushes into them from an air reservoir, into which it has been driven by a bellows. A mouth-blown instrument can not be considered an organ. The Syrinx had no wind reservoir; the cheng supplied this deficiency. Now the bellows was lacking.

Audsley remarks that there is good ground to believe that the bellows was suggested by the bagpipe. The ancient Egyptians used the bellows in the form of a leather bag,to blow the smelting furnace. This we know from the representations of ancient paintings. No record exists of their use of the bagpipe. The old Greeks were well acquainted with the bellows. Two invlated skins (δυο φυσαι) constituted bellows. Homer alludes to the bellows in the Iliad (1200-85 B.C.) in describing the forge and bellows presided over by Vulcan. The bagpipe was known in the pastoral districts of Greece at a very remote time. There are numerous allusions to it in the works of the classical authors. Aristophanes (450-380 B.C.) in his play, "The Acharnians" speaks of the"bumble bee pipers" or "droners on the bagpipe." Plato speaks of the humming tone of the bagpipe. In spite of the prevalence of the bellows and the bagpipe during the 5th century B. C. it was not until the 3rd century B. C. that the hydraulic organ-- the first real instrument of the organ type--was invented.

With the invention of the hydraulic organ, we enter upon the definite historical period of the organ. According to an authority quoted by Athenaeus, the first organist was

Ctesibius of Alexandrai (200 B. C.), who invented the hydraulic organ. Tertullian spoke of it as an exceedingly complicated instrument. It was provided with perforated sliders to open and shut the mouths of the pipes. The wind supply was obtained, without intermission, from a bellows. Water performed the same function as a weight in the modern organ, i. e. it steadied the wind pressure within the wind chest; hence its name. A steady wind supply, was never possible, however carefully the air pumps were regulated, due to the fact that air has a high "compressibility" which water has a comparatively low "compressibility." Neron the great Alexandrian mathmatician (3rd Century B. C.) left a tolerably clear description of the organ of his time in his work on Pneumatics. A more detailed description of the Hydraulic organ is given in his work on Architecture by Marcus Vitruvius Pollio (B. C. 25) While the literary description seems clear enough, the absence of any illustrations has given rise to much ingenious speculation and no one has ever been able to reconstruct an instrument agreeing with the description.

The organ as described by Vitruvius, possibley with some few improvements, was held in high esteem by the Romans. Nero was much interested in organs. One of his coins shows an organ on one side, with a sprig of laurel, and on the other side, a man who might have been a victor in the amphitheatre. It is possible that the organ was used at games and similar events. In a poem by Optatianus, the organ is described as having bellows, wind-chest, and twenty-six pipes--the treble on the left and the bass on the right.

The later organ of Vitruvius reached a high stage of per-

fection, having as many as eight ranks of pipes, a draw stop mechanism, a piston blowing apparatus, an air reservoir in which a definite pressure was imparted to the air. An organ was found in Carthage, dating from 100-200 A. D. according to antique pottery experts, which represents, in a rude, but fairly correct manner the organ as described by Vitruvius. Each stop in this instrument comprises eighteen notes: G A B^{b} $B^{\natural}$ c' d' e^{b}' e' f' f#' g' a^{b}' a' b^{b}' $b^{\natural}$' c^{2} d^{2} e^{2}. Altho our knowledge of the hydraulic organ is vague, it is certain that its use extended until a comparatively late period. In A. D. 826 a water organ was erected by a Venetian in the church of Aquisgranum, the modern Aix-la-Chapelle. Mention is made of a hydraulic organ in the chronicle of Wm. of Malmesbury in the portion where it alludes to Pope Silvester (d. 1003 A. D.) to whose skill and knowledge its construction was due. It is said to have been placed in the Cathedral of Reims, and to have been in existence in 1125 A. D. Its sound was produced by steam. The original passage follows: " Aquae calefactae violentia ventus emergens implet concavitatem barbiti, et per multi foratiles transitus aenae fistulae modulatos clamores emittunt."

There seems to be no reasonable doubt that purely pneumatic organs were built and used at the same time as the later hydraulicons. A Greek enigmatical epigram attributed to the Emperor Julian (The Apostate d. 363 A. D.) Certainly alluded to a pneumatic organ:

Ἀλλοίην ὁρόω δονάκων φύσιν· ἧπου ἀπ' ἄλλης

Χαλκείης τάχα μᾶλλον ἀνεβλάστησαν ἀρούρης,
Ἄγριοι, οὐδ' ἀνέμοισιν ὑφ' ἡμετέροις δονέονται,
Ἀλλ' ὑπὸ ταυρείης προθορὼν σπήλυγγος ἀήτης,
Νέρθεν ἐυτρήτων καλάμων ὑπὸ ῥίξαν ὁδεύει.
Καί τις ἀνὴρ ἀγέρωχος ἔχων θοὰ δάκτυλα χειρὸς,
Ἵσταται ἀυφαφόων κανόνας συυφράδμονας αὐλῶν·
Οἱ δ' ἁπαλὸν σκιρτῶντες, ἀποθλίβουσιν ἀοιδήν.

Burney has translated it thus: "I see reeds of a new species, the growth of another and a brazen soil, such as are not agitated by our winds, but by a blast that rushes from a leathern cavern beneath their roots; while a robust mortal, running with swift fingers over the concordant keys, makes them as they dance, emit melodious sounds." Rimbault takes exception to this translation and renders a literal one: "I see a species of reeds; surely from another and brazen soil have they sprung--rude. Nor are they agitated by our winds, but a blast rushing forth from a cavern of bull's hide makes its way from below the root of reeds with many openings; and a highly gifted man with nimble fingers, handles the yielding rods of the pipes, while they, softly bounding, press out a sound ".St. Augustine (A. D. 354-430) alludes to the pneumatic organ in his commentary on the 55th Psalm, in the following words:

"Organa dicuntur omnia instrumenta musicorum. *Non solum illud organum dicitur, quod grande est et inflatur follibus,* sed etiam quidquid aptatur ad cantilenam et corporeum est quo instrumento utitur qui cantat, organum dicitur;"which may be translated thus:. "All instruments of music are designated by the word organs. The term is not confined to the instruments of large dimen-

sions in which the air is furnished by bellows, but is employed to designate any instrument on which the musician performs a melody." The earliest known representation of a pneumatic organ is found on an obelisk erected by Theodosius the Great (A. D. 346-395). E. de Coussemaker alluding to this sculpture says that the pipes of one organ were narrower than those of the other. Hence he concludes that there were two kinds of organs: "organ grave" and "organ aigu"--translated perhaps as "bass organ" and "treble organ" or as "grave organ" and "bright piercing organ." Another representation of a pneumatic organ of the 4th century A. D. is found in the Museum at Arles, France, in the exhibit of the sculpture of the Gallo--Romaine period.

"Just when the organ was first used in the service of the church is doubtful. At first it was used only in places of amusement."--Audsley. According to Bishop Julianus, the organ was first used in public worship in Spain in the middle of the 5th Century. Platina, in his lives of the Popes, says it was first used for this purpose by Pope Vitalianus (A. D. 657-782) However, only in the most important churches, from this time until 8th century. We have practically no definite information on this point. Sponsel, however, in his Orgelhistorie doubts that Vitalianus referred to the organ in his use of the word "organis," and contends that this word may just as well mean wind instruments. In fact, Sponsel doubts that the hydraulic organ was ever used in the church. Our sources of information, however, are so vague, that we are in doubt concerning many points in these early centuries

centuries. Audsley writes: "The history of the organ during the first centuries of the Christian era is so unsatisfactory that it may well be passed over without loss to the student."

The pneumatic organ was well known in the 5th century, as is shown by a passage in a commentary on Psalm CL by Cassiodorns (A. D. 468-560) He refers to the organ as a "tower of pipes, which when blown by wind produces a very full sound; and that a proper modulation may be rendered practicable,;it is provided with certain wooden tongues internally, which skillfully pressed by the fingers of the performer, produce very grand and full music."

The first organs in France and Germany were imported from Byzantium. Of them we know very little, except that their fame was widespread. Pepin, King of the Franks, (A. D. 757-769) who, in his zeal for the Roman Church, was the chief means of establishing its ritual in France, sent an urgent request to the Byzantine Emperor Constantine V (741-775) to be furnished with an organ for his church. The request was complied with and later a special embassy, headed by a Roman bishop, Stephanus, brough a"great organ with leaden pipes" which was placed in the church of St. Corneille at Compiegne. It is generally believed that this was a hydraulic organ. In 812 Charlemagne had an organ constructed for his church at Aix-la-Chapelle after the model of his father's instrument. It was so wonderful, according to Strabo, that its dulcet tone caused the death of a female. It was purely pneumatic. Rimbault says that an

organ, constructed by Giafar, was sent to Charlemagne by the renowned "Commander of the Faithful," the Caliph Haroun Alraschid. In 820, a priest of Venice erected an organ for Louis le Debonnaire, King of France, in Aix-la-Chapelle. Theophilus, Emperor of the East caused two large organs to be built by Byzantine artists, the pipes and other portions of which were richly gilded, and the cases embellis hed with gold and precious stones.

The erection of these organs in Compiegne and Aix-la-Chapelle was sufficient to give an impulse to French artists, and before the end of the 9th century, the building of organs became an established industry in France and Germany and the finest instruments were fabricated there. Pope John VIII (A. D. 872-882) in a letter to Bishop Anno of Friesingen requests him to send him an organ and an organist to teach the art of organ playing to Roman students. About this time the Bavarian organ builders were invited to practise their art in Italian cities. The first organ of any great size was constructed in Munich. Seidel tells us that "at the end of the 10th century Germany was in possession of a small number of organs, for Praetorius in his Syntagma Musicum relates that in 944 there were organs at Erfurt, Magdeburg, and Halberstadt." About this time Pope Sylvester II (d. 1003 at Mayence) is said to have made considerable improvements on the hydraulic organ, which had to this time maintained its ground. In the 11th century an organ of sixteen keys (levers) was built for the Cathedral of Magdeburg. "From this time" says Seidel "We have no

sufficient accounts of the progress of organ building. Either such undertakings were suspended on account of the wars or the zeal in this direction was cooled down and checked by some fanatics who deemed the use of organs in churches profane."

"Ehgland does not seem to have been much behind France and Germany, for we learn that fair organs with pipes of copper mounted in gilded frames were built there."During the reign of Edgar (A. D. 957-975) St. Dunstan--so William of Malmesbury tells us--erected an organ in Abingdon Abbey, which was one of the most perfect instruments built up to that time. St. Dunstan also had an organ built in the Abbey of Glastonbury and it is probable that other organs were constructed under his patronage and placed in England churches. An organ was presented to the Convent of Ramsey by Earl Elwin in the 10th Century. An important instrument was erected in the Monastic Church of Winchester in the time of Bishop Ethelwold (963-980) This was an organ of four hundred pipes, blown by twenty-six bellows, which could be heard throughout the whole town. It was played by "two brethren of Concordant spirit" and so great was its volume that the listeners had to "stop with their hands their gaping ears."

The state of the organ during these centuries was, of course, quite primitive. Theophilus is here our greatest source of information. In his vague"De Diversis Artibus" written about the end of the 11th century he gives us a fair idea of the organ as it then existed. A keyboard as

We understand it, did not exist. Of the organ's compass, he does not speak, and gives NO description of the form and construction of the bellows. In the "Psalter of Eadwine" (11th century) is a drawing of a large pneumatic organ of ten or fourteen pipes, which required two players and four blowers. Greatest care was necessary in blowing because no reservoir was present to hold the compressed air. A drawing of a similar instrument was found in the Utrecht Psalter. Seidel mentions the organ of sixteen keys of the Magdeburg Cathedral. The keys were an ell (a yard) long three, five or six inches wide and one and one-half inches deep. Instead of our action string and ropes were used. So clumsy and heavy was the action that the player had to beat the key down about a foot with his feet. The bellows were deficient. So small were they that at times as many as twenty or more bellows were required for one organ. They were unprovided with weights and the wind supply was very irregular and spasmodic. There was no pure or correct tuning of the organ. Regularly progressing harmony was unheard of because only one note could be hit at a time.

During the twelfth century the number of keys was increased according to Seidel, who probably speaks of Germany. After this, each key received two or three additional pipes which sounded the fifth and octave or third and tenth, thus making the organ a mixture.

The thirteenth century saw little development in the art of organ building for it received a check at the hands of the Latin and Greek Churches, both declaring against the

use of the organ in public worship. In the Latin church it was soon restored to its former dignified condition, but it has never been reintroduced into the Greek Church. "This very opposition" we are told by Mr. C. A. Edwards, "was just what the art needed, for controversy produced notoriety, and we find the organ at last asserting itself, so that in a few years every monastery possessed a small instrument termed a "Regal" to lead the voices. From this period the organ has steadily progressed."

The fourteenth century saw greater advancement in the construction of the keyboard, which was made smaller, neater and of greater compass, covering two or three octaves, Chromatic tones were added and a lesser fall was given to the keys so that they could be played with the fingers. In this century we enter the epoch in which the organ developed along truly musical lines by immense strides. Every church of importance had one or more instruments, tho most of them were of a portable nature. The larger instruments were termed "Positives" to distinguish them from the smaller movable "Regal" or "Portative." The Regal was used frequently in processions since it could be handled by one person, while the Portative which was more unwieldy was placed in churches where it performed the work of the smaller organ i. e. to sustain the plain song melody. Portatives and Regals continued in use until the middle of the eighteenth century. The Diary of Henry VIII mentions "five pair of double Regalls" and "thirteen pair of single Regalls." "Single" distinguished the organ WITH ONE KEYBOARD from the "double

which had two keyboards each commanding a distinct tonal division. The Regal had keys like the organ, but smaller. There are a good many representations of these old Regals in England, Scotland, France and Germany.

Of the "Positive" organs of this time there are few representations. One, in a Latin Psalter, preserved in the Bibliotheque nationale at Paris, shows an instrument of seventeen keys, each having two pipes a fifth apart and a drone pipe on one end.

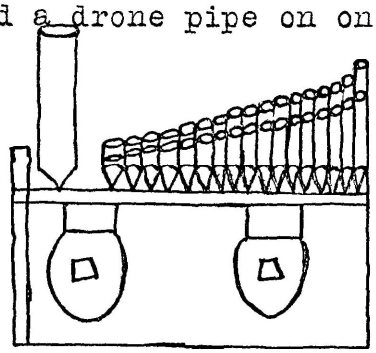

Fig. 2.

In 1312 a Venetian patrician Marinus Sanutus, a zealous promoter of Christianity, caused an organ to be built for the church of St. Raphael. The builder, a German, was given the honorable surname, Torcellus, organs being called Torcelli in Italy at that time. "From this", says Seidel, "We see that the Germans already had a great reputation as organ builders and we shall see that later inventions and improvements in organ building came almost solely from the Germans." Audsley remarks: "The Germans were the true pioneers in all great developments in organ building.

Our first evidence of the use of the weighted bellows is found in an engraving by Israel Van Mecken, showing a German performing on a small positive. Such weighted bell-

ows were a decided improvement over the old ones and were later used very extensively by German builders. Even so late as 1862 they were used by Schultz of Paulinzelle in an organ in the Parish church of Doncaster, England. In the "Theatrum Instrumentorum" of Praetorius (A. D. 1680), bellows ~~xxxxxxxxxx~~ are shown, pumped by the weight of men's bodies. Each bellows has a sort of shoe into which the blower passes his foot. An engraving, "Music Personified" in "Margarita Philosopica Nova" (1508) shows a small Positive of twenty-two keys with three black ones, indicating the presence of certain chromatic notes in the scale. It had one stop and weighted bellows. Praetorius in his "Theatrum Instrumentorum" shows a positive of unusual and tasteful design, having three stops of 2', 1 1/3, and 1' respectively. All the labial pipes are placed on top of the case, whose form and decoration are of great elegance. While most of the organs of the time were of a portable nature, still there were a few of more important dimensions, but owing to the ruthless destruction of organs in England during the time of Cromwell, we have no adequate idea of its riches in this form of art. ~~In Germany the organ had made considerable progress. This brings~~ This brings us to the close of the second epoch in the art of organ building during which the instrument outgrew its embryonic state and assumed a form which resembled more closely the organ as we know it. Epoch-making inventions were soon to follow.

The pedal was invented in 1470 by Bernhard, a German, an organist to the Doge of Venice. Hipkins follows a sug-

gestion of Praetorius that Bernhard merely introduced the Pedal into Italy at this time, and that the Pedal had been in use in Germany long before. Be that as it may, 1470 is generally held to be the date of the invention of the Pedal. It was the pedal that gave to the organ its grandeur, depth and majesty. At first it had no separate pipes of its own--so thinks Hipkins--but simply operated the third keyboard which contained the drone. Seidel says: "All these old works had either a short or broken octave in the pedal. The first pedals were of eight keys. One of the best examples of an early pedal board is found in the Halberstadt organ whose compass was one octave; B♮ C C♯ D D♯ E F F♯ G G♯ A B♭. Hipkins is of the opinion that the restricted manual compass of this organ was originally chromatic, because of the necessity of chromatic notes for the transposition of the Plainsong. In fact, during the 14th and 15th centuries, B♭ was reconed as a diatonic note because of its necessary use in the Plainsong for transposition.

The compass of both the keyboards and the pedal gradually increased until in 1493 when Conrad Rotenburger rebuilt the great organ at Bamberg, he changed it to the "long measure" in the bass. The pedals extended through F G A B♭ and then from B♮, chromatically to B♭ above the bass clef. The manuals were changed to a compass of three octaves and a third, from F below the bass clef to A above the treble. "From the end of the 15th century, drone bass notes as tonics or dominants to an octave system, seem to have got the better of the Scholastic tetrachordal ideal of the scale. Where the long measure was not carried down to the low F on the keyboard, it was done as far as possible by the substitution of pipes. The

B♮ key sounded not B♮ but the G below it; C# did duty for A, and D# when not retained for E♭ did for B♮, but as this latter was hardly a drone note the E♭ was preferred. This was the "short measure", for three hundred years known as the "short octave". In Italy it has remained quite up to the present time, but generally with E for the apparently lowest key, which really sounds C; F# sounds D, and G#, E. Long drones may be observed in the pictures of the old Portatives. In the Cecilia panel (by the Van Eycks, and now in Berlin) a Positive of small chapel organ is shown, in which the lowest note D has a special KEY situated above the keyboard at the left hand side, while above this key there is a latch, the only possible use of which could have been to fix a drone. (Hipkins)

The desire to impart varying degrees of power to the organ tone caused the employment of more than one wind chest and varied pipe appointment which could be played upon by turn. The oldest example of this kind was the organ erected in the Cathedral of Halberstadt in 1361 which had three claviers, two treble and one bass, with a separate wind-chest for each, and the tone series had been increased to twenty-four by the addition of seven semitones. The keys were very wide; on the upper manuals four inches from center to center of each key, with chromatic key two inches wide, placed two and one half inches above the diatonic. "About this time, or a little later, a beginning was made thru the insertion of double rows of ventils--one behind the other--to divide the pipe-work into separate registers; one row of ventils being actuated directly by the keys, while the other row was actuated

simultaneously, at will, by means of a coupling device. Thus the Principal stops, the Octaves, and the Quints could be singled out from the aggregate of pipes and placed on a separate wind-chest, while the mixture remained on its own chest with its separate and separable wind supply."
--Topfer

Heretofore, all harmony in singing as well as on the organ consisted in progressions of octaves and fifths and their doublings. The organ did not play tones, but whole chords, and its playing required the use of one key at a time. However, after the foundation stops had been separated from the compound stops, and after musical taste had progressed far enough to form chords with changing intervals, the old organ keyboard no longer fulfilled its purpose, and then received the form it has retained to this day, except that the keys were of greater width--a fifth then occupying the space now embracing a whole octave. And now the fingers no longer sufficed for three and four part playing; hence the need for the pedal. But the manual keys soon began to be made smaller. In 1499 when Cranz built the great organ for St. Blaise, Brunswick, the octave was the width of only nine keys of Praetorius' time. This made it possible for an octave to be comfortably grasped by an average hand. "As early" then "as the end of the 15th century the organ had assumed a form no essentials of which have been changed during the subsequent centuries: namely, with a plurality of keyboards and wind-chests, the arrangement of the stop action and the pedal." Topfer.

To give an idea of the size of the 15th century organ, one or two may be mentioned. The organ in the church of St. Laurence, built in 1479 by Marca, contained 1100 pipes in the Great organ and 454 in the Positive. The largest pipe was thirty-nine feet in length, including its foot. The organ in the church of St. Sebald (Nurnberg) built in 1444 by Traxdorff, cost the then large sum of 1150 florins, proving that it must have been a large instrument. Although it is probable that chiefly small instruments were used in England's Churches during the 15th century, still there were a few large ones. A notable example was the organ in the Abbey Church of St. Albans, costing about two hundred and fifty dollars and said to be the largest and best organ in England at the time. Toward the end of the 15th and the beginning of the 16th century organs were being introduced into England from the Continent. Mention is made of the erection of a "pair of Flemish organs" in Louth in 1500. At this time the Flemish had attained considerable skill in organ building, which they long retained. Prior to this time, it is quite certain that all organs in England were the works of monks or priests. The first noteworthy name of a professional builder is that of William Wotton of Oxford, who in 1489 built an organ for Merton College and Magdalen Chapel.

In France fine organs were built in the 15th and 16th centuries as is proved by the excellent cases still extant. In Amiens Cathedral there still remains the fine case of of an organ built about 1430. Also in the Cathedral of

Chartres, a great organ was built about the end of the 15th century. Two fine examples of early 16th century organs are to be found in the Cathedral of Perpignan (Pyrénées-Orientales) and the Church of Hombleux (Somme). M. Viollet-le-Duc informs us that French churches prior to this time had been served by smaller instruments placed in the choir enclosure. He adds, however, that during the 14th century, organs were already built which had the characteristic elements of those of our own day; Superposed manuals, which could be coupled; pipes of tin in front; three bellows; mutation stops and a choir (positive) organ, in which the flutes were said to be "tres-agreeable." We are told of an organ of five divisions given by the Archbishop of Toulouse to a fraternity in 1463. The five divisions--Grand; Positif; a smaller organ superposed on the Great organ; and two smaller organs on opposite sides of the loft--could be played separately or in ensemble. The oldest organ in France of which we have knowledge, is in Solies-Ville dans le Var.

In Spain, the art of organ building made great progress from the 14th century onward. Several large and noteworthy instruments wer built during the 14th, 15th and 16th centuries, among which may be mentioned: The organ in the Cathedral of Salamanca, built latter part of 14th century; the instrument in the Cathredal of Zaragoza (built 1413); and the church of San Pablo in Zaragoza (built 1420); The large organ in Barcelona Cathedral (built 1550) and in 1563; the magnificent organ in the Cathedral of Tarragona. This instrument had

three manuals and a short octave of pedals. In order to give an idea of the variety of effects to be obtained from a 16th century organ and also to compare the tonal appointment of a representative German with that of representative Spanish organ of the time, we append the specifications of the Tarragona organ and the great organ built in 1585 for the Church of St. Martin, Danzig:

Organ in Cathedral of Tarragona (1563)

"On the right-hand side:

Trompetilla.	Vox Humana.
Flauta.	Cornetilla.
Trompeta Real tiple.	Bajones.
Clarin.	Nazardo en 17.
Corneta.	Nazardo en 15.
Carcanarda.	Octava.
Flautado en 14.	Oboe.
Flautado de 28.	Trompetta Contras.

"On the left-hand side:

Pajarillos.	Corno Ingles.
Fagote.	Octava.
Bordon.	Trompeta Real Bajo.
Clarin en 15.	Trompeta Real.
Dulzaiana.	Trompeta Magna.
Lleno Simbalo.	Lleno Corona.
Lleno en 15.	Flautada.
Cara de 28.	Cara de 14.
Orlos.	Lleno en 15.
Nazardo en 12.	Flauto Conica.
Nazardo en 15.	Bordon."

Organ in St. Martin, Danzig. (1585)

Oberwerk.

Prinzipal,	16 Fuss.	Offenflöt oder Viol,	3 Fuss.
Hohlflöt,	16 "	Spillpfeife	4 "
Quintadena,	16 "	Viol.	
Spillpfeife,	8 "	Sedecima.	
Oktav,	8 "	Rauschquint.	
Quintadena,	8 "	Zimbel, dreifach 144 Pfeifen.	
(Von diesen Stimmen hatte jede 48 Pfeifen).		Mixtur, vierundswanzigfach 1152 Pfeifen.	

Rückpositiv.

Prinzipal.		Kleine Blockflöt,	4 Fuss.
Hohlflöt,	8 Fuss.	Gemshorn.	
Spillpfeife,	8 "	Sedecima.	
Oktav,	4 "	Flöte.	
Offenflöt,	4 "	Waldflöt.	
Ruschquint.		Trommel,	8 "
Nasatt.		Krumhorn,	8 "
Zimbel, 144 Pfeifen		Zinken	4 "
Mixture, 220 Pfeifen		Schallmeyen	4 "

Brust, oder Vorpositive.

Gedackt Stimme,	8 Fuss	Zimbel.	
Gedackt,	4 Fuss	Dunecken	2 "
Prinzipal	4 "	Regal, singend	8 "
Quintadena	4 "	Zinken	4 "

Pedal zum Oberwerk. (43 Noten).

Gross Unterbass,	32 Fuss	Posaunenbass	16 "
Unterbass	16 "	Trommete	8 "

Pedal auf beiden Seiten.

Flöte oder Ocktav	8 Fuss	Bauernpfeife.	
Gedackt	8 "	Zimbel, 144 Pfeifen.	
Quintadena	4 "	Mixtur, 220 " .	
Superocktav	2 "	Spitz oder Kornett.	
Nachthorn.		Trommeten oder Schallmeyen.	
Rauschquint		Krummhörner.	

Altho, our knowledge of organ building in Italy during the earlier centuries of Middle Ages is highly unsatisfactory, it can be said, without doubt, that the earlier instruments in this country were of German manufacture. For example, the organ in the Church of St. Raphael, Venice, which was built in 1312 by a German. During the 15th and 16th centuries, organ building made great strides in Italy and, doubtless, all the important stops known to German builders were introduced into Italian organs, including stops of 32' and 16'. It was in this period that the organs in the Cathedrals of Milan, Mantua, Cremona, Bergamo, Como and Brescia were built by the great Italian builder, Bartolommeo Antegnati of Brescia, whose family practised the art for several generations. In 1471 was built the fine organ in the Basilica of San Petronio, Bologna, one of the best examples of mediaeval Italian art. About 1550 an organ was built for the distinguished organist, Vincentino, which had 126 keys, so arranged that they could be played in three different ways: diatonically, chromatically, and enharmonically. This instrument was called "Archiorgano" to distinguish it from the organ of ordinary compass. It is interesting to note that at this time it was the custom for the church committee to furnish all wood, tin and other materials, necessary for his craft, to the builder, who then constructed the organ entirely in the church. The fronts of the organs were often covered by swinging shutters, on which were paintings of biblical subjects. Sometimes, too, the pipes of the Positive were enclosed in the main case of the organ, but a seeming case

or wooden structure stood in the place of the Positive to act as screen for the organist.

To summarize then, the most noteworthy improvements of the 15th and 16th centuries were: (1) the addition of the pedal (1470); (2) Increased compass for manuals and the pedal; (3) Smaller manual keys, so that an octave could be comfortably grasped with one hand (1499).(4) the introduction of the Ruckpositive placed back of the organist, and connected with the main organ by means of trackers running under the bench. It was commonly used in the liturgical services; (5) The addition of characteristic stops like the spitzflote and the Reeds, which were furnished by the Regal. Also stops of 16' and 32' were first noted in the 15th century.

"The 17th century brought the true commencement of a new epoch in the art--that is which, owing to the conservative character of the organ building art, we are still working"--Audsley, During these two centuries the erection of organs proceeded with more certain and scientific methods; larger and more elaborate instruments were build and the organ gradually assumed the form with which John Sebastian Bach was intimately acquainted. The bellows was improved and the wind supply put on a surer basis. An organ builder of Wettin named Forner invented the "Anemometer," which indicated the pressure and any unsteadiness of the wind. The cuniform or diagonal bellows was still being used and some of ~~their~~ its obvious imperfections exercised the ingenuity of builders. A steady wind supply was never secured by the

old builders. It is probable that the bellows, with wooden ribs and only a single fold of leather, was invented by Hans Lobsinger, an organ builder of Nurnberg, who in 1570 introduced these. Considerable improvement was made in the tonal department of the organ. Great care was expended on the organ cases and their external embellishments. The lips of pipes were sometimes formed like lions' jaws, and every where were placed angels with trumpets in their hands, which by some contrivance could be moved to and from their mouths. Carillons and kettledrums were also handled by the angels. In the midst of this heavenly host a larger angel appeared with a waving baton; and there was the firmament with revolving suns and moving stars--called cymbal stars--which jingled. Even the host of the animal kingdom was summoned. "By going to such extremes, not only much money was spent unworthily, but the instrument was degraded to a raree-show. The later builders, be it said to their credit, gradually a bolished these absurd, detrimental things and directed their attention to more important matters "--Seidel. In 1712 came the invention of the swell organ by the Jordans, a family of English builders. In this dept. of the organ the English were about fifty years ahead of other countries. In 1771 Burney found the swell unknown in France, Italy and Germany. And in 1775, he found the swell entirely unknown in Berlin, altho there was a Swell organ of three stops--so few that it was not noticed--in the organ of St. Michael Church, Hamburg (blt. 1764). This is thot to be the first swell introduced on the Continent--just fifty-two years after

its invention. The swell has never found the favor in Germany that it has found in other countries. Rheinberger had the swell pedal removed from his organ in the Munich Conservatory because he considered it unorganlike. And lastly, we must mention the development of the pedal department, the increased diginity and grandeur given it by German builders. "There can be no disputing with Germany the honor of having created the Pedal organ and having been far in advance of all the rest of Europe in this direction until very recent times."--Audsley.

In considering the European countries separately, Germany may well take first place. Dr. Burney, speaking of these times in his "History of Music" says: "Great organs and great organists seem for more than two centuries to have been the natural growth of Germany. The number of organ builders whose names are well known to the lovers of the noble instrument is hardly credible in any other country. Music and musicians were held in high esteem. Of so great concern was the building of an organ at that time (1592) that the magistrates of Gronigen, North Holland drew up detailed specifications and a contract with the builder, whom it took four years to build the organ. And before it was accepted the instrument had to be inspected by something like fifty-three eminent organists. According to Seidel, the 17th century German organs were tuned to two pitches: (1) "Chamber pitch", which was also the pitch of the orchestra; (2) "Choir pitch", which was a whole tone higher than chamber pitch. Many of the larger instruments

were tuned to choir pitch because it entailed a considerable saving in the metal pipework. All organs were tuned during this century according to the "unequal temperment," which received its death blow in the next century. Some of the more important instruments of the 17th century in Germany might be mentioned:

The Church of St. Maurice of Halle in 1625. Later replaced by an instrument of forty stops.

Cathedral of Merseburg in 1629. Enlarged in 1698, and in 1853 took its present dimensions of eighty stops.

Church of Wesel in 1645.

Church of St. Nicholas, Stralsund in 1660. One of the most imposing instruments of the century.

Aegidienkirche, Lübeck, 1675. "A noble landmark of 17th century organ building."

Church of St. Nicholas, Hamburg in 1686. Destroyed by fire in 1842. Built by Abbe Schmittker, whose name was held in great veneration in Germany."Displayed the highest development reached by organ builders in this century."

The 18th century produced the great Gottfried Silberman, one of Germany's most prominent builders. Edward Holmes in his "Rambles among the Musicians of Germany," writing of the organs of Silberman in Dresden, speaks of the astounding effect produced when a fugue was played on these old instruments. This was chiefly due to the magnificent, thick and independent pedals; and he notes: "if a mechanic could be found in England, who could unite the sweet cathedral tone of the English organ with the magnificence of Silbermann's, a perfect organ would be the result." In the 18th century

the organs stood up of Germany stood supreme in the development and dignity of the pedal department and led the way for the greatest achievements, subsequently accomplished in other countries. Two of the most noteworthy 18th century German organs are found in the Cathedral of Merseburg (1702, 68 stops, 5 manuals and pedal) and the Cathedral of S. S. Peter and Paul. at Goerlitz. According to Dr. Hopkins, this latter instrument, which was built by Eugenius Casparini and his son, contained 82 stops, 55 of which are through speaking stops. It had 3270 pipes, only 522 of which are of metal, and was of three manuals and pedal. Twelve pairs of diagonal bellows furnished it with wind. It is said to have occupied six years in its construction This same builder erected an organ of 34 speaking stops in the Church of St. Bernhardin, Breslau. Its fine pedal department well illustrates the German treatment of the pedal at this time.

Major-Bass	32	Feet	Major-Quinte	10/2/3	Feet
Posaune	32	Feet	Doppelflöte	8	"
Principal	16	Feet	Quintation	8	"
Violon	16	Feet	Violin	8	"
Sub Bass	16	Feet	Trompette	8	"
Posaune	16	Feet	Super-Octave	4	"

During the 17th and 18th centuries the Dutch builders ranked next to the German in importance and the excellence of their works. Some very fine instruments were built by these. The organ in the Niewe Kerk, Amsterdam (blt. 1673) by van Goor, was a fine instrument, having a magnificent case and an overwhelming mass of mixture work, showing no less than XXXIII ranks for seven stops. An excellent instrument was built in the Old Church, Amsterdam in 1686, which had much mixture, but a pedal lacking in gravity, when compared to German organs. No organ ever earned such a world-wide reputation as that in the Cathedral of St. Bavon

Harlem. It was started in 1738 and took two years to build, and contained sixty stops and only metal pipes. Its cost was about $58000. The organ in the Cathedral of St. John at Gouda, Holland (built 1736) is noted for its beautifully toned stops, especially its Vox Humana.

The history of organ building in the Netherlands and Belgium in these centuries is very similar to that of Holland and North Germany, because of the constant intercourse between these countries during times of peace. In some instances, organs were erected in one country by builders of an adjoining country. This was the case with the organs in the Church of St. Stephan, Nymegen and the Church of St. John, Bois le Duc (blt. 1619). The latter was a most magnificent instrument with a sumptuous case. The Great organ contains one 32" stop and three 16' stops, while the Pedal has no 32' stops at all and only two 16' stops. Another great organ of the time was that in the Cathedral of Antwerp (blt. 1645).

The art of organ building made considerable progress, both in its theoretical aspects and practical works. This is evidenced by the publication of that rare work of Dom Bedos de Celles, Benedictine of the Congregation of Saint-Maur, "L'Art du Facteur d'Orgues" It is the largest and most complete treatise on organ building ever published. According th this source, tracker action was being used in France and Germany in 1766, as well as toe-pedals, tho, very narrow. The pedal compass was CCC--D. We also gather from this work that labial and reed pipes were in use, but the range of tone color was very limited. The string and Lieblichgedeckt families seem not to have been known to Dom Bedos; but

that the Germans used string-toned stops to some extent is shown by the "Violonchel" and "Grosse Gamba" in the Weingarten organ. Numerous instruments of importance were built for French Churches during the 17th and 18th centuries, but none of historical interest remain; only some cases are left us to give an idea of the importance of the original instruments. The case of the organ in the church of St. Ouen, Rouen is still intact.

The art was in a satisfactory state in Spain and Italy during the 17th and 18th centuries. Some important instruments were built in Spain, a fine example being in the Cathedral of Tortosa (blt. 1650). In Italy it was more often the case that the organs were built by German and Flemish builders. The organ in the Church of Santa Maria di Carignano, at Genoa was built in 1660 by William Hermann, a Flemish Jesuit.

England was somewhat backward in organ building during the 17th century. Several organs of note were built by the Dallams--that in King's College Chapel, Cambridge (1606); Worcester Cathedral organ in 1613; the organ in York Cathedral in 1632, which had two manuals, no pedals and only fourteen speaking stops; and the organs in the Cathedral of Durham and St. Paul's London--then came the order by Parliament, authorizing the wholesale destruction of organs in 1644. The fanatical crusade against the organ had really begun some years before when in 1642 a tract was published in London, entitled, "The Organ's Funerall, or The Quiristers Lamentation for the Abolishment of Superstition and Superstitions Ceremonies." In a book, "Mercurius Rusticus" (1657) we are vividly told of the work of the despoilers. Some few organs were saved, notably that in Magdalen College Chapel,

Oxford. The Restoration in 1660 stayed further destruction of instruments, but the construction of new ones did not immediately follow, because builders were lacking. Accordingly foreign builders were invited to come to England and settle.

The two prominent builders coming in response to this invitation were "Father" Smith and Renatus Harris, the former from Germany and the latter from France. Both brought the most advanced methods of organ building from their respective countries and inaugurated the first great period in English organ building. Smith's first organ--at Royal Chapel, Whitehall--was a disappointment. He was an excellent builder, tho, being very careful in his choice of wood, and never mending a disordered pipe, but replacing it by a new one. This accounts for the evenness and sweetness of his stops and soundness of his pipes. Some of his most famous works are: (1) the organ in the Temple Church, London, which caused great controversy. It had quarter notes. (2) the organ in Durham Cathedral; St. Paul's, London; and Trinity College, Cambridge.

Between Harris and Smith, both of whom were good musicians, an intense professional ~~xxxxxxxxxxxxxxxxxxxx~~ rivalry existed. When Smith built the St. Paul's Organ Harris issued a "Broadside" entitled "Queries about St. Paul's Organ", which consisted of nine questions, all of which aimed at the disparagement of Smith's skill and knowledge as an organ builder. Further provoked by Smith's successes, he advertised that on a certain day he would divide a half note into 100 parts,not mathematically, but by ear. All because Smith had said it couldn't be done. Harris built organs for the Cathedrals of Gloucester, Worcester, Chicester, Winchester, Bristol, Hereford, Dublin, Ely and

Salisbury; the last (blt. 1710) being one of the most important instruments of early 18th century works. The surprising thing is that Harris and Father Smith never introduced a pedal department or even a pedal clavier into an English organ, tho they well knew the almost indispensable quality of the pedal. "Pedals were not introduced into England until well toward the end of the 18th century; and it was not until several decades of the 19th century had passed that the pedal was looked upon as an all-important division of the English organ. Even up to the present day it has been shamefully neglected there."--Audsley.

About this time the Jordans invented the swell organ(in 1712) In 1740 came John Snetzler from Passau, Germany, who introduced many German ideas and methods. In the Church of St. Margaret, Lynn Regis, Norfolk, in 1754, he introduced the Double Diapason and the Dulciana stops. Snetzler is credited with having introduced the pedal clavier into England. It is generally believed that the first English organ to have pedals was the Lutheran Chapel, Savoy, London. Contemporaneous with Snetzler was Samuel Green, a builder of high artistic skill. He made the finest reeds of the time, and improved the swell box by giving it shutters. He got the idea from the swell shutters, which Schudi, a maker of harpsichords, patented in 1769. In 1790 he built an organ for St. Georges' Chapel, Winsdor Castle, in which he inclosed the whole great organ in a "Venetian" Swell. His greatest contribution, however, was the horizontal bellows, which he invented in 1789. Audsley attributes the invention of the compound horizontal bellows to Cummings, an English clockmaker, in 1762. According to this source, it was first put to a practical

test in 1787, and subsequently came into general use in Great Britain.

"The opening of the 19th Century saw the organ, in every country where it was constructed, a very clumsy, insufficient instrument in all its mechanical features. The blowing arrangements, including the cumberson, diagonal bellows were of the most primitive description. The key action was heavy enough at times to tire the muscles of a blacksmith. The stop action was so heavy as to call for the exertions of one or two able-bodied assistants during a performance. The tonal appointments, while more advanced than the mechanical, were of a most monotonous character." Thus Adusley summarizes the condition of the organ in the year 1800. Even tho, we had a swell organ and a better pedal organ, and numerous additions in stops, the organ was still very crude. Audsley's picture may at first sight seem overdrawn, but when we consider how many of the modern organ's most essential parts were not added until the latter half of the 19th century, then we can get an idea of the unsatisfactory state of the organ of the early 19th century.

It was not until 1835 that decided and sucessful attempts to improve the old tracker action were made. Booth in 1827 constructed a pneumatic lever, which he used in one of his organs. It was not called a pneumatic lever, tho, but "puffs". In 1835 Hamilton of Edinburgh constructed a pneumatic lever which in principle of construction and mode of action was essentially the same as in the most perfect examples of today. In 1839, Charles Barker of Bath took out a French patent for his pneumatic lever. After trying in vain to introduce it into various English organs, Cavaillé- Coll, who collaborated with Barker, used it in the

church of St. Denis, near Paris. This was the first continental organ into which the pneumatic lever was introduced. In 1851, Willis took out an English patent on Barker's invention, the latter having unwisely left the field open. One can scarcely overestimate the importance of the introduction of the pneumatic lever, for it was the beginning of the attempt to make lighter the key and stop action. It is not necessary to mention the various relief pallets, which half eliminated the difficulties which the pneumatic lever, together with the tubular pneumatic action, entirely overcame. The pneumatic lever used compressed air to do the work of the mechanical levers of the old tracker action, in operating the pallet in the wind-chest. The tubular pneumatic action went a step further and used air instead of levers thruout the whole process--from key to pallet. This action was invented by Prosper-Antoine Moitessier of Montpellier, France in 1835. His action was of the exhaust type. Willis constructed an organ for St. Paul's in London with this tubular pneumatic action ~~for~~ in 1872. John Stainer praised it and W. T. Best damned it. The action never was satisfactory in large buildings where the console was far removed from the organ body, because of the slowness of response caused by the slow rate at which pneumatic impulses travel. The need for electric action was urgent, indeed. The old tracker action was absolutely impossible in the large organs and the tubular pneumatic had been found wanting.

The first attempts with the electro-pneumatic had been ~~found~~ failures because of the amount of current required by the electro-magnets. The high voltage often resulted in fires.

This action was invented by Peschard, Caen in France, in 1866. Barker, the Englishman, collaborated with him for years, but Peschard reaped no pecuniary advantage from the connection. Up to about 1890, tho. the electric actions were so unsatisfactory that such men as Stainer and Best refused to take them seriously into account for the future. Then Robert Hope-Jones came on the scene. He recognized the value of low voltage, good insulation and the avoidance of self-induction. He also introduced the round wire contact. It is due chiefly to his genius that the electro-pneumatic action has become the great factor that it has. To show the different stages of the improved organ action, we give a diagram of the pneumatic lever, the tubular-pneumatic action, and the electro-pneumatic action:

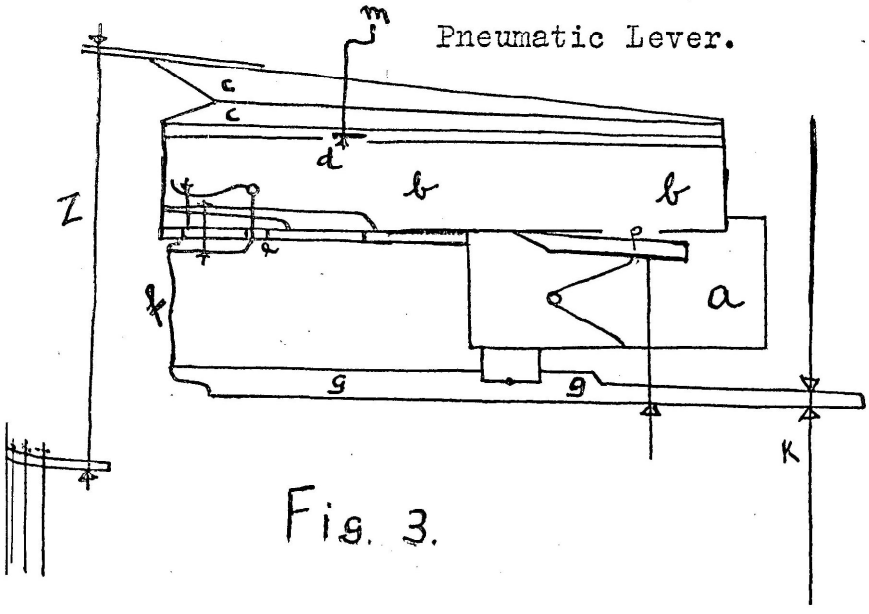

Fig. 3.

The operation is as follows: "When either the finger or foot is pressed upon a key connected with *k*, the outer end of the back-fall *gg* is pulled down, which opens the pallet *p*. The compressed air in *a*, then rushes through the groove *bb* into the bellows *cc*, which rises and lifts with it all the action attached to it by *z*. As the top of the bellows *cc* rises, it lifts up the throttle-valve *d* (regulated by the wire *m*) which prevents the ingress of any more compressed air by *bb*. But the action of the key on *gg*, which OPENED the pallet *p*, also allowed the double-acting waste-valve *e* to close, and the tape *f* hangs loose. The compressed air, therefore, as it is admitted through *bb* cannot escape, but on the other hand when the key releases the outer end of *g*, and lets it rise up again, the tape *f* becomes tightened and opens the waste-valve, the bellows *cc*, then drops into its closed position."

The Tubular Pneumatic Action.

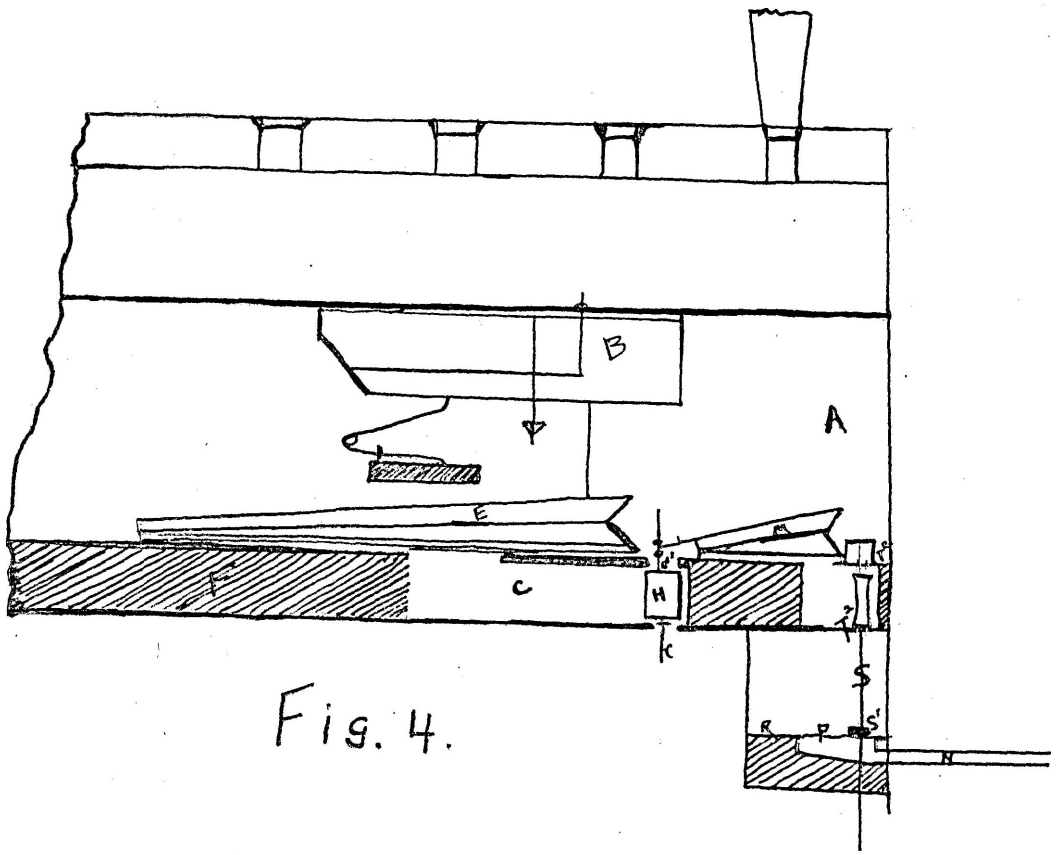

Fig. 4.

The operation is as follows:

The tubes, *N*, from each key is fixed to the hole connected to the small puffs *P* in the puff-board *R*. Air under pressure is admitted by the key-action and conveyed by the tubes *N*, which raises the corresponding button valves S^1, lifting their spindles *S* and closing the apertures T^2 in the bottom of the wind-chest *A*, and opening a similar aperture *T* in the bottom of the cover-board *F*, causing the compressed air to escape from the exhaust bellows *M*, which closes, raising the solid valve *H* in the cover-board *F* and, closing the aperture *J'* in the wind-chest A, shuts off the air from the bellows, which immediately closes, drawing down the pallet *B*, which ADMITS air (or wind) to the pipes."

The Electro-Pneumatic Lever.

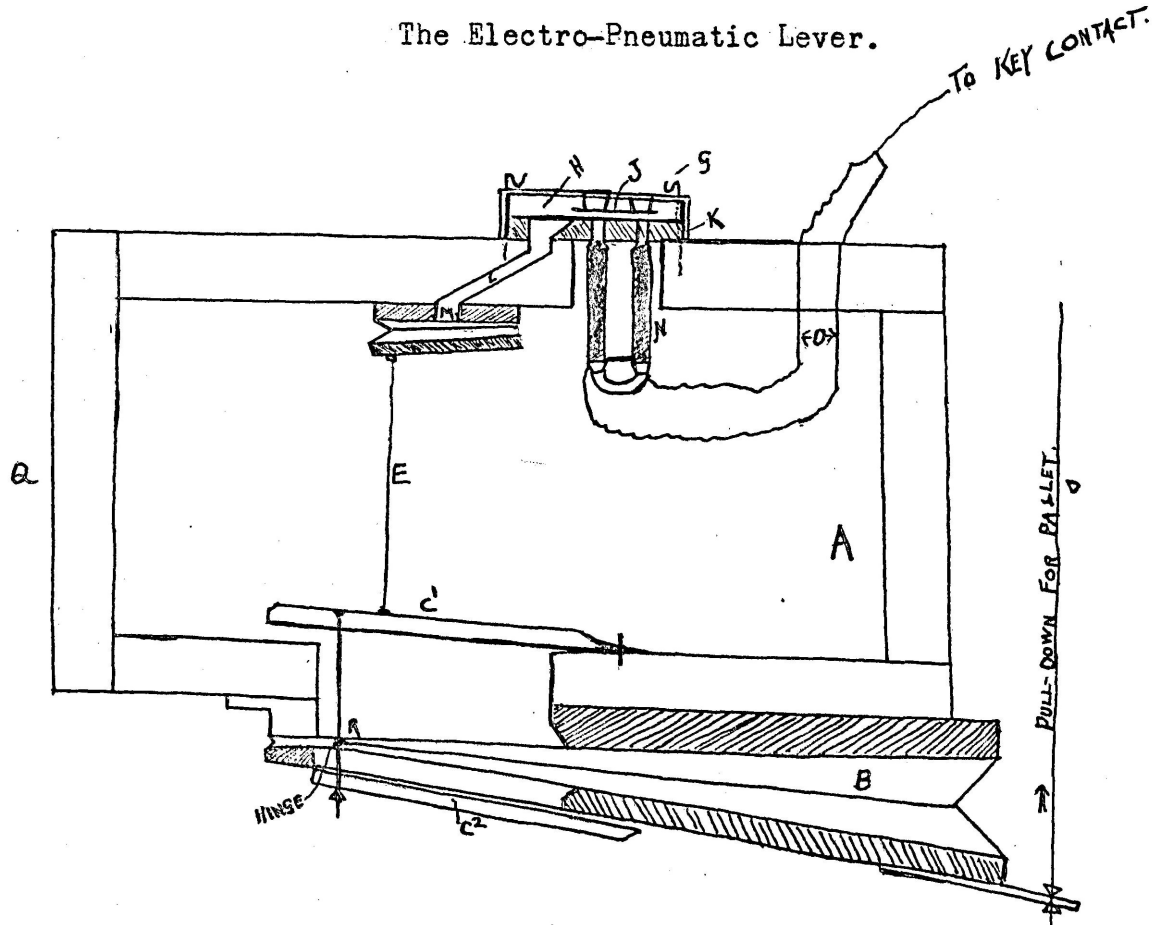

The working is as follows: "The box A is connected with organ bellows and so (immediately the wind is put into the organ) is filled with air under pressure, which passes upward between the poles of the magnet N. Lifting the small iron disc J, it finds its way through the passage L into the small motor M, thus allowing the movable portion of the motor M to remain in its lower position, the pallet C^1 being closed and the pallet C^2 being open. Under these conditions, the large motor B collapses and the pull-down P (which is connected with the organ pallet) rises. When a weak current of electricity is caused to circulate round the coils of the electro-magnet N, the small armature disc J is drawn off the valve-seat H on the zinc-plate K. The compressed air from within the small motor M escapes by way of the passage L, through the openings in the valve seat H into the atmosphere. The compressed air in the box A then acts upon the movable portion of the small motor M in such a way that it is forced upwards and caused (through the medium of the pull-wire E) to lift the supply pallet C^1 and close the exhaust pallet C^2, thus allowing compressed air to rush from the box A into the motor B and so cause this latter motor to open and (through the medium of the pull down P) to pull the sound board pallet from its seat and allow wind to pass into the pipes.

III. DISCUSSION OF THE MODERN ORGAN

It would almost seem that the word organ is destined to be a general, rather than a specific term. In the days of St. Augustine, the word organis embraced all musical instruments. Later it was narrowed down to one instrument--the organ of the church and the classicists. Now there seems to be a tendency to enlarge the term again. In some of our modern "organs", we find included all the instruments of the orchestra, from the violins to the cymbals. For instance, that "organ" known as the "Unit Orchestra". Some of these instruments provide for the imitation of every sound in nature, and some that not even nature knows. Their only claim to being called organs is that their myriad resources are controlled by one person.

At the present time, we have two schools of organ building: The first school holds to the conception of the organ of the classicists--Bach, Rhineberger, Widor, César Franck--and adds only such mechanical and tonal innovations as are in harmony with their ideal. The great test for an organ by a builder of this school is: "How will Bach sound on it?" This school is developing the organ along the legitimate and orthodox lines. The second school seems to have departed entirely from the conception of a true organ. It builds miniature orchestras. The organs of this school have little of the organ about them, save the wind-chest and a console. Diapasons are superseded by various species of Tibias. Mixtures are unknown. The classic organ is a polyphonic instrument; the tendency of the moderns seem to be to make of it

a monophonic instrument. This is the gist of the whole matter. Wherever the builder has the proper conception of the nature of the organ, he will build proper instruments. The second school concerns us not at all in this paper, save as a matter of information. It is with the first school that we have to deal, and even here we find two tendencies: the one to preserve the rather severe, less pliant instrument of the purists, whose expression is of "straight lines", as Widor calls it. The other tendency is to add to the conventional organ, as a nucleus, a mass of modern tonal material, and to make the organ more intimately expressive in every way.

The activities of the second school of organ builders center around one man--Robert Hope-Jones. Hope-Jones first attracted attention by the remarkable organ he had built for St. John's Church, Birkenhead, England. Into this instrument he had introduced some of his epoch-making inventions, which caused no end of discussion, But this was merely a beginning. Later he came to America and there became associated in turn with some of the most prominent builders. Here his creative genius had ample opportunity to spend itself. One invention after another came from his laboratories, which have brot about an almost new instrument. In the opinion of many, his development of the organ has not been along truly organistic lines. But, nevertheless, many of Hope-Jones' innovations have been a boon to the legitimate organ, notably: his improvement of the electric

action; the leathered lip in pipes; the roundness and smoothness of reeds and the pedal stops--the result of throwing the reeds and other pipes into vibration by a "percussive blow"; his improved stop tablets; employment of high wind pressures; and his improved method of tuning reeds.

The Unit Organ or Unit Orchestra is Hope-Jones' greatest achievment. In this instrument all stops of similar quality are placed in the same swell box. The division of the organ is made according to the timbre of stops. Into this instrument Hope-Jones has introduced his most revolutionary inventions. The percussive instruments of the orchestra are faithfully represented, even to the drums. Means for the reproduction of divers sounds of nature are provided and the instrument particularly lends itself to the vivid picturing of storms and calms. Supporters of Hope-Jones' ideas aver that an organ of ten real stops of his building can produce the effect of an organ of sixty stops of the conventional kind. We doubt it, after having heard perhaps a dozen of these Unit Organs. That they are ingenious, no one can deny. They may even have a place in a theatre where the expense of a human orchestra is to be avoided, But they can never supersede or be grafted on to a real organ. We append the specifications of the Hope-Jones Unit Orchestra in the Paris Theatre, Denver, Colorado.

Pedal Organ (32 Notes)

	Feet		Feet
Diaphone	32	Octave	8
Ophicleide	16	Clarinet	8
Diaphone	16	Cello	8
Bass	16	Flute	8
Tuba Horn	8	Flute	4

Bass Drum, Kettle Drum, Crash Cymbals--Second Touches.
Great to Pedal; Solo Octave to Pedal.
Diaphone 32 ft. Second Touch; Ophicleide 16 ft. Pizzicato Touch. Six Adjustable Toe Pistons.

Accompaniment Organ (61 Notes)

Vox Humana (Ten C)	16	Octave Celeste	4
Tuba Horn	8	Flute	4
Diaphonic Diapason	8	Twelfth	2 2/3
Clarinet	8	Piccolo	2
Viole d'Orchestre	8	Chrysoglott	4
Viole Celeste	8	Snare Drum	
Flute	8	Tambourine	
Vox Humana	8	Castanets	
Viol	4		

Triangle, Cathedral Chimes, Sleigh Bells, Xylophone, Tuba Horn, Solo to Accompaniment--Second Touches.
Flute, Solo to Accompaniment--Pizzicato Touch.
Ten Adjustable Combination Pistons.
One Double Touch Tablet to cause the Pedal Stops and Couplers to move so as at all times to furnish automatically a Suitable Bass.

Great Organ (61 Notes).

Ophicleide	16	Clarinet (Ten C)	16
Diaphone	16	Contre Viole (Ten C)	16
Bass	16	Tuba Horn	8

Diaphonic Diap.	8	Flute	4
Clarinet	8	Twelfth	2 2/3
Viole d' Orchestre	8	Viol	2
Viole Celeste	8	Piccolo	2
Flute	8	Tierce	1 3/5
Vox Humana	8	Chrysoglott	4
Clarion	4	Bells	4
Viol	4	Sleigh Bells	4
Octave Celeste	4	Xylophone	2

Octave, Solo to Great
Ophicleide, Solo to Great--Second Touches.
Solo to Great Pizzicato Touch.
Ten Adjustable Combination Pistons.
One Double Touch Tablet to cause the Pedal Stops and Couplers to move so as at all times to furnish automatically a Suitable Bass.

Solo Organ (37 Notes)

Tibai Clausa	8	Quintadena	78
Trumpet	8	Cathedral Chimes	8
Orchestral Oboe	8	Bells	4
Kinura	8	Sleigh Bells	4
Oboe Horn	8	Xylophone	2

Six Adjustable Combination Pistons.

General

Two Expression Levers, two Indicating and Controlling Keys, Thunder Pedal (Diaphone), Thunder Pedal (Reed), Two Tremulants, Re-Iterator for Strings, Re-Iterator for Solo.
One Double Touch Sforzando Pedal, First Touch, Full Stops, Second Touch, Percussion.
One Double Touch Sforzando Pedal, First Touch Snare Drum, Second Touch Bass Drum, and Crash Cymbals.

Leaving the pseudo-organ, we now come to the organ proper. Since the scope of this paper is limited, and since the greatest developments in organ building during the past twenty-five years have taken place in America, we shall confine ourselves almost entirely to the works found in this country. The instruments in Continental Europe are, in general outline, what they were in 1850. They have what the American instruments most need--majesty of effect--and have been content to remain adequate vehicles for the classics.

We may best understand the modern organ by scrutinizing an advanced, but representative, example, the organ built by the Austin Organ Company of Hartford, Conn., for the Panama-Pacific Exposition, San Francisci, Cal., 1915.

Great Organ

Compass CC to C4--61 notes

1 Double		
Open Diapason	16'	
Bourdon	16'	
Open Diapason (1 large)	8'	Swell to Great
Open Diapason (2 med.)	8'	Swell to Great Sub
Open Diapason (3 small)	8'	Swell to Great Octave
Viole Gamba	8'	Choir to Great
Dulcina	8'	Choir to Great Sub.
Gemshorn	8'	Choir to Great Octave
Stopped Diapason	8'	Solo and Echo to Great
Philomela	8'	Solo and Echo to Great
Harmonic Flute	8'	Octave.
Octave	4'	Eight adjustable com-
Gambette	4'	position pistons to con-
Flute Harmonique	4'	trol Great stops.
Twelfth	2 2/3	
Fifteenth	2	
Mixture 4 and 5 ranks		
Double Trumpet	16'	
Posaune	8'	
French Trumpet	8'	
Clarion	4'	
Sesqueltra, 3 ranks		
Cathedral Chimes		

Swell Organ

Bourdon	16'	Mixture, 4 and 5 ranks	
Double Dulciana	16'	Contra Posaune	16'
Open Diapason (large)	8'	Contra Fagotto	16'
Open Diapason (small)	8'	Cornopean	8'
Viole d'Orchestre	8'	Oboe	8'
Salicional	8'	Harmonic Trumpet	8'
Aeoline	8'	Clarion	4'
Voix Celeste	8'	Vox Humana	8'
Clarabella	8'	Unda Maris	8'
Spitzfloete	8'	Tremulant	
Lieblich Gedeckt	8'	Swell Sub.	
Principal	4'	Swell Unison off	
Violina	4'	Swell Octave	
Flute Harmonique	4'	Solo and Echo to Swell	
Wald Floete	4'	Eight adjustable composition	
Piccolo Harmonique	2'	pistons to control Swell stops	

Choir Organ

Contra Gamba	16'	Cor Anglais
Open Diapason	8'	Celesta
Gamba	8'	Tremulant
Concert Flute	8'	Choir Sub.
Hohl Flute	8'	Choir Unison off
Flauto Dolce	8'	Choir Octave
Quintadena	8'	Swell to Choir
Dulciana	8'	Swell to Choir Sub.
Flute Celeste	8'	Swell to Choir Octave.
Octave	4'	Solo and Echo to Choir
Flute Harmonique	4'	Solo and Echo to Choir Sub.
Suabe Flute	4'	Solo and Echo to Choir
Harmonic Piccolo	2'	Octave.
Dolce Cornet (3 ranks)		Eight adjustable composition
Harmonic Trumpet	8'	pistons to control Choir
Clarionet	8'	stops.

Echo organ also playable on choir manual by duplex action.

Solo Organ

Tuba Magna	8'	Dolce	8'
Tuba Marabilis	8'	French Horn	8'
Tuba Clarion	4'	Orchestral Oboe	8'
Viole d'Orchestre	8'	Corno di Bassetto	8'
Viole Celeste	8'	Vox Humana	8'
Concert Flute	8'	Harmonic Trumpet	8'
Harmonic Flute	4'	Flugel Horn	8'
Harmonic Piccolo	2'	Tremulant	

Echo Organ

Lieblich Bourdon	16'
Small Diapason	8'
Gamba	8'
Dolce	8'
Cor de Nuit	8'
Chimney Flute	8'
Unda Maris	8'
Flauto Dolce	4'

Solo and Echo Octave
Great to Solo and Echo.
Solo "on," Solo "off."
Solo and Echo "on."
Choir "on," Echo "off."

Vox Humana 8'
Cathedral Chimes
Tremulant
Echo organ stops are playable also from Choir manual by duplex action.
Solo and Echo Sub.
Solo and Echo Unison off.
Echo "on," Choir "off."
Choir and Echo "on."
Eight adjustable composition pistons to control Solo and Echo Stops.

Pedal Organ

Gravissima, resultant	64'
Double Open Diapason	32'
Contra Violone	32'
Open Diapason	16'
Open Diapason	16'
Open Diapason	16'
Violone	16'
Dulciana	16'
Bourdon	16'
Lieblich Bourdon	16'
Gross Quint	10 2/3
Flauto Dolce	8'
Gross Flute	8'
Octave Dulciana	8'
Violoncello	8'
Octave Flute	4'
Contra Bombarde	32'
Trombone	16'
Tuba Octave Trombone	16'
Clarion	8'
Pasuane	4'
Great to Pedal	16'
Swell to Pedal	

Swell to Pedal Octave.
Choir to Pedal
Solo and Echo to Pedal
Solo and Echo to Pedal Octave.
Pedal Super Octave
Choir to Pedal Octave
The organ is voiced on 5-10-15 and 25 inches wind pressures.
Six adjustable composition pedals to control Pedal organ.
Eight composition pedals duplicating the eight general pistons over upper manual.
Four zero pistons affecting Swell, Choir, Great and Solo.
Eight general pistons over upper manual affecting the entire organ including couplers, Adjustable.
One zero piston over upper manual affecting the entire organ.

Accessory

Balanced Crescendo Pedal, adjustable, not moving registers.
Balanced Swell Pedal.
Balanced Choir Pedal.
Balanced Solo and Echo Pedal.

Great to Pedal, reversible.
Solo to Pedal, reversible.
Solo to Great, reversible.
Sforzando Pedal.

Here we have an instrument in six divisions, played from five manuals and pedals. The manuals are so placed that it is perfectly easy to play on any two adjoining manuals with one hand at the same time. The electric action leaves nothing to be desired in crispness and promptness of response. The action is lighter than that of the pianoforte, and anything that is technically possible on the keyboard of the piano is technically possible on the facile keyboard of the modern organ. This is the temptation that causes the downfall of many organists. The many expression levers permit the organist to produce undreamt-of effects. The remarkable mechanism of the console enables him to shift his registers with amazing speed. Mechanically, it seems to be near to perfection itself.

Considering the tonal resources, we find anything from the diapasons to the orchestral oboe. Out of over one hundred stops, there are only thirteen independent stops of the diapason family and but three mixtures. Contrast this with the organ in the Cathedral of Notre Dame in Paris, France. This instrument has 86 sounding stops, of which 33 are of the diapason family, 13 are mutation stops, and six mixtures. Is it any wonder that Alexander Guilmant complained of our organs as lacking in majesty of effect? In many of our greatest American organs, one-half to three-fourths the tonal resources consist of diverse orchestral flutes, reeds, viols, and trumpets. This tells the whole story of the tendency of even our best builders. In some few organs, as in Symphony Hall, Boston; St. Bartholomew's, New York City; and Trinity Church, Boston, we find the proper balance of basic organ tone with imitative tone.

Certainly these complex resources are not necessary for the proper performance of the organ classics; and it is quite allowable that the scope of organ music should have widened within legitimate limits, as the organ's tonal and mechanical resources increased. But, to us, it all is as the ~~mechanical~~ ~~[illegible]~~ case of the factory that became bankrupted thru the sale of its by-products. Have not we rather unfitted the organ for Bach, tho we are able to play Wagner on it? First things have become last, as, a casual perusal of most organ-recital programs will show. We shall now consider some details of modern organ construction.

ACTION--In the modern organ are four kinds of action: the tracker action, in which the communication from key to pallet is effected by means of a direct system of mechanical levers, as in the pianoforte. This is the oldest action and is most satisfactory for very small organs. However, a modified form of this action, the tracker pneumatic action, is preferable. In this form, the action of air is made to lessen the resistance of the key in opening the pallets; the tubular-pneumatic action, in which mechanical levers are entirely replaced by the action of compressed or attenuated air. This action has the disadvantage of a certain slowness of attack because pneumatic impulses travel slowly (less than 1100 feet per second.) It can only be used in instruments where the console is close to the body of the organ. Its expense also argues against it. By far the most desirable, most efficient, and most economical is the electro-pneumatic action

Since we have explained this action in the first part of our paper it is not necessary to do so here. In an organ with the electric action it makes little difference whether the console is fifty feet or fifty miles away. The response is instantaneous. The application of electricity to the mechanism of the organ is responsible for some of the most startling inventions--the double touch, electric stop manipulation, control of expression levers from the organ keys. And twenty years ago such men as J. Stainer and W. T. Best regarded the use of electricity in the organ as impracticable!

THE CONSOLE--In this part of the organ the greatest diversity among the instruments of different builders obtains. This has been the cause of despair for many a concert player. Several years ago, one of the most gifted players in the United States gave up his concert playing because of the lack of uniformity in organs over the country. It is well nigh impossible for a performer to do himself justice on an instrument with which he has been acquainted for two hours. The most crying need in the art of organ building today--if the organ shall be in any sense a concert instrument--is a uniform console. The factors standing in the way of this are: the large number of builders; the many different uses to which the organ is put; and the diversity of opinion among organists. Surely a formidable array of difficulties!

The manual claviers should be of uniform construction and compass. In this respect there is little left to be desired except a standardization in the arrangement of manuals. The usual compass of the manuals met with is sixty-one notes, CC-- c[5]

Some builders have of late constructed the manuals in such a manner that they all tend toward a common center, i. e. they are no longer parallel to each other, but make acute angles with each other. This arrangement greatly facilitates the use of one hand on two adjoining manuals claviers at the same time. Even to such an arrangement there are objectors among organists. But here plain common sense should decide. Tilted manual claviers will hinder no one in the proper performance of the classics. And, if anything that facilitates the changing of the hands from manual to manual, is a help at times in such performances, then there is even an advantage to be gained. But, for orchestral transcriptions and ultra-modern compositions, these tilted claviers are a tremendous advantage. And since they do no harm to the purist's playing and are of the greatest service to the liberal, they have an excellent right to existence.

The matter of the arrangement of the manuals is not so simple a matter, since it depends not only on taste but also on different conceptions of the nature and function of different divisions of the organ. In small organs of two manuals, there is practically no diversity of opinion. The lower manual is the stronger and the upper the weaker. In organs of three manuals, three dispositions are met with:

(1)	Swell organ (top)	As in the Protestant church in Mühlhausen and the Cathedral of Senlise (Oise)
	Choir organ (middle)	
G	Great organ (bottom)	

(2) Choir organ
Swell Organ
Great organ

A very uncommon disposition and not good. Found in the Petrikirche, at Soest, in Westphalia. In this organ the choir division is extremely delicate, hence the arrangement is allowable.

(3) Swell organ
Great organ
Choir organ

The most common arrangement found in America. Audsley and W. T. Best were in favor of abandoning this disposition for the first on the ground that it placed the most valuable accompanimental clavier immediately under the most expressive solo division of the organ. This is an insignificant point, indeed. Anyone who is sufficiently at home on a large organ to be able to use claviers, which are not contiguous, at the same time, will experience no difficulty in accompanying a solo on the Swell clavier with the choir, even tho the great clavier lie between the two. The other advantages of this arrangement are that the great clavier, which is the most important of the organ, lies at a more natural angle and distance from the players body; and that the two subsidiary manuals adjoin the great, thus making it easier to "step-down" and "build up" smoothly.

In organs of four claviers, we find as many as five dispositions:

(1) Solo organ
Swell organ
Choir organ
Great organ

(Albert Hall, Sheffield, England) W. T. Best favored this disposition.)

(2) Solo organ
Swell organ
Great organ
Choir organ

(St. George's Hall, Liverpool, and the Chicago Auditorium)

(3) Swell organ
Solo organ
Great organ
Choir organ

Very uncommon. (Used by Best in town hall organ of Bolton, Lancashire, England.)

(4) Recitativ
Positif

	Bombarde	(Used by Cavaille'Coll in the church
	Grand Orgue	of St. Ouen at Rouen.)
(5)	Solo organ (Echo)	(Used in town hall organ of Leeds,
	Great organ	England,) Unique.
	Swell organ	
	Choir organ (Echo)	

For the sake of simplicity, the principle underlying the disposition of manual claviers should be the same for an organ of five claviers as for one of three. The whole struggle is centered around the relative position of the choir, great and swell claviers. In an organ of three or more manuals, the position of the lowest clavier is unnaturally low and that of the highest clavier unnaturally high. Therefore, it is most logical to place the most important clavier in the middle and more natural position. Whatever manuals are added then above three, should be placed above the swell manual, making the disposition thus:

Echo organ
Solo organ
Swell organ
Great organ
Choir organ

There is a general tendency on the part of builders to limit the number of claviers to four, playing the Echo and Solo organs from one clavier. The use of electricity makes THIS satisfactory and simple. It might be interesting to give two dispositions found in French organs of five claviers:

(1) Recitativ (Found in Notre Dame and St. Sulpice, Paris.)
Positif
Bombarde
Grande Orgue
Grand Choeur
(2) Solo organ
Recitativ Expressiv
Positiv
Bombarde (In St. Peter's, Rome.)
Grand Choeur and Grand Orgue

The introduction of double-touch keyboards is open to debate. The argument that it would provide for the tonal emphasis of any voice at will may not be so desirable as it sounds at first. The question is whether it will not introduce forms of expression that are entirely un-organ-like. The temptation is already strong, with our many expression levers, et cetera, to indulge in too many nuances that are not of straight lines and designs. The use of the double-touch for the manipulation of swell pedals is absurd. This may be proper in an orchestral organ, but in the conventional instrument it has no place at all.

The pedal clavier is conforming to uniform standards more and more with each year. All large organs are now being built with concave and radiating pedal-boards. Up to 1903, flat pedal claviers were used exclusively. Then came the concave, parallel boards of German invention. And finally the concave radiating pedals, which had been used in England since 1855, when Willis introduced them into the St. George's Hall organ. In some quarters, S. S. Wesley is held to be the inventor of this board. It places all the notes on the pedal-board at an equal distance from the

player. The foot strikes the notes in ~~distance from the~~ a radial manner, rather than vertical and thus minimizes the friction of the keys. It is to be desired that such pedal boards should be placed not only in large organs, but also in the smaller instruments of the country. Matters of expense still cause some builders to put in parallel, concave boards. It is hardly necessary to point out the great desirability of having absolute uniformity in this matter.

There are, at the present time, six or seven different patterns of tilting stop keys. The form patented by Hope-Jones seems to be the most satisfactory and is found oftener in organs than any other. There are very excellent forms of draw stops found, also. The battle over the question which is preferable--draw stops or tilting tablets--continues merrily. Excellent champions are found for each contention. Still the majority in this country seem to favor the tablet stop-keys because of the ease and speed with which they are handled. When the shifting of stops is effected largely thru combination buttons and pistons, it really matters little whether we have draw stops or tilting tablets. But when shifting stops directly with the fingers, much greater speed, ease and grace can be obtained from the use of tilting tablets. There is no awkward straining to reach the stop keys, which is so disturbing to an audience. The chief objectors to this arrangement take their position on the ground that the

modern console is becoming so dainty that it causes one to regard the organ in a more trivial light. The organ seems more substantial to them, more grand, if it have rows of draw-stops. We have always associated the grandness and majesty of the organ with its tones, and its architecture , but never with the console. To the observer, any sort of a console seems disproportionately small, in comparision to the organ itself, even tho it be of bewildering complexity. The argument is poor. It must be remembered that as mechanical improvements are added to the organ, useless parts will be eliminated. The console, as well as other parts of the organ, will be more carefully planned, made more efficient, even become more dainty, perhaps! But shall this affect one's conception of the instrument? Certainly not. The organist must look beyond the console for the soul of his instrument. To most observers, tho, it seems that the real reason lies in long association and habit.

That two-thirds of the names found on stop keys in England and America are meaningless and misleading is a fact, patent to one who will take the trouble to look thru a dictionary of organ stops. Builders have deluged us with numberless synonymous names for old stops, and a like number of absurd names for new stops. Often, tho, they were not new at all, but simply slight variations from the old stops. In either case, the"desire of some builders to differ from their contemporaries" lay at the bottom of the practise. As a result, the nomenclature of our organ stops is most confusing.

To bring system and light out of this chaos and darkness, will take much time and labor.

Reformers must work toward two ends: (1) the naming of stops according to a proper principle, and (2) the complete elimination of superfluous and meaningless names. The chief essential in the name of a stop is that it "convey to the mind a tolerably clear idea of the tone it produces, its strength of voice, and its relationship to the fundamental unison sounds of the instrument. It has nothing to do with the manner of construction or form."--Audsley. If this criterion be rigidly applied, we will no longer have to bear with such absurd names as Hedeiaphon, Kalliope, Phoneuma, Kinura, Bibia, Plena, Tibia Clausa, Tibia Mollis, Tibia Dura, Suabe Flute, Clarinet Flute, Calcant, Fuchsschwanz, Jula, and Lieblich Gedackt. The name of a mixture should be solely indicative of the harmonics it sounds. Let such names as Tierce, Larigot, Sesquialtera, Fourniture, Cymbel, Dolce Cornet, be abandoned and instead use simply:

III
Mixture
15-19-22 We thus indicate how many ranks a mixture has, and just what harmonics it sounds. Audsley is an ardent advocate of this system.

The re-naming of organ stops is no inconsiderable task, and for the present we may well be satisfied if we are rid of some few of the most troublesome misnomers. Once rid of the useless names and possessed of a logical system of stop nomenclature, we can give our attention to a uniform arrangement of the stops in the console.

Audsley suggests the classification of the tonal resources of the organ into two main groups:

I. Unimitative Voices

1. Pure organ-Tone----Diapasons.

2. Free organ-Tone----Dulciana, Salicional, Melodia.

3. Flute organ-Tone----Clarabella, Philomela, Harmonic Flute.

4. Viol organ -tone----Gamba, Aeoline.

II. Imitative Voices.

1. Orchestral Flute-Tone--Orchestral Flute, Piccolo.

2. Orchestral String-Tone--Violin, Viola, Violoncello.

3. Orchestral Reed-Tone--Clarinet, Oboe, Bassoon.

4. Orchestral Brass-Tone--Trumpet, Horn, Cornopean,

These are certainly the two most logical divisions. If the stop keys of each manual occupied the same general position in the console of all organs, and the stop keys of each subdivision of unimitative and imitative voices occupied the same location within the stop-key area of each manual, what a help it would be for the organist. If, in addition to this, all similar stops were given the same names, we would have attained a uniformity that would be a stimulus to more artistic organ playing.

THE EXTENSION OF SWELL PEDAL. There is a tendency in some quarters to extend the swell thru practically the whole organ. These enthusiasts would enclose every stop on the organ, with the exception of the Principals in the Great organ, in swell boxes. Thus they wish to make

the organ more expressive. It is unfortunate that this cult is as strong as it is; Audsley ardently encourages the practice in his great work. It is an un-organistic tendency. Many of our finest instruments have undergone this dubious innovation. We insist that the swell pedal is not organ-like. It disturbs the most characteristic quality of the organ tone--the prolongation of tone on a constant level. Those, who wish to fill the organ full of swells, are helping to make it into a gigantic accordeon. For the imitative stops, the swell may be proper. But we must constantly be watchful that the demands of this subsidiary part of the organ, shall not swallow up the claims of the organ proper. Just as language limits thot and colors it, so does an instrument limit a player and his conception of the music. The most baleful effects will be felt in the younger generation of players, who will know no other organ than the pseudo-organ of modern times.

THE TONAL APPOINTMENT OF THE PEDAL ORGAN. "The Pedal is an essential part of the organ: by it alone is it exalted above all other instruments; for its magnificence, grandeur, and majesty depend upon it. Without the pedal this great instrument is no longer great." This is Forkel's comment on the importance of this department. Edward Holmes, in his "Rambles Among the Musicians of Germany "(publ. in 1828), says"---with what effect a piece of florid and artful counterpart comes out of a German organ where the player sits with a flood of sound ready to the touch of his fingers and a store of thunder lying harmless at his feet. The thickness, depth,

and independence of the pedals, here vindicate supremely the poetical ascendancy of the fugue over every other class of musical composition; and in slow subjects when the bass rolls in its ponderousness--there is no disputing it--it is like the fiat of the Omnipotent". What Bach held to be the nature and function of the pedal, his works best tell.

"The Pedal is an essential part of the organ." Without it we have no organ. And yet it is the division of the organ, which is at the present time, most shamefully neglected. As Audsley says: "It is quite safe to say that of all divisions of the organ, as it is constructed in English speaking countries, the Pedal Organ is the most deficient and radically imperfect." The reasons are found chiefly:in the lack of funds and knowledge as to the true office of the pedal organ; and ignorance on the part of organ builders. Altho, much attention is being given this problem at the present time, our organs--particularly organs of medium size--make poor showings when their pedal departments are held up to scrutiny. "The necessity for a truly adequate pedal organ seems never to have been fully recognized in England and the United States."-- Audsley.

For purposes of information and comparison, it is interesting to give a list of some representative German organs of the 18th and 19th Centuries, showing the proportion of Pedal stops to the number of manual stops:

	No. of Man. stops	No. of ped. stops
Lutheran Church, Vienna	15	8
Lutheran Church, Warsaw	18	9

	No. of Man. stops	No. of ped. stops
St. Emmeran, Regensburg	18	8
Catholic Church, Irebniz	22	11
Cathedral of Verden	25	9
St. Stephen's, Vienna	28	13
St. Maria, Cologne	30	10
Cathedral of Antwerp	34	10
S. S. Peter and Paul, Goerlitz	36	19
St. Maria, Wismar	40	16
Cathedral of Breslau	42	18
Parish Church, Muhlhausen	42	18
Cathedral of Haarlem	45	15
St. Paul, Frankfort	52	22
Monastery Church, Weingarten	53	17
Cathedral of Merseburg	61	20
Cathedral of Ulm	81	31

Striking an average, the pedal organ is found to contain about five-twelfths of the number of stops contained in the manual departments. "This is an average that could not be approached even in the most favorable list of English or American organs."--Audsley. Tho, we need not go to any abnormal lengths, we shall never have satisfactory pedal organs until we follow the great German masters in this direction. In nine-tenths of the organs of 15-25 stops in this country we do not have a single pedal stop of any assertion or independence of tone. In our larger organs, so often the addition of pedals to the ensemble makes but little effect because of excessive borrowing. And here we shall digress a moment to consider these two terms: Borrowing and Duplication .

Borrowing consists in forming from a stop of grave pitch, one or more stops of higher pitch, e, g. a double open diapason 32' comprising 116 pipes is the source from which are borrowed the following stops: contre-bass 16'; diapason 8'; octave 4'; 15th; and piccolo 1'. The pipes of one manual have been connected with the keys of another manual. Dupli-

cation consists in the introduction of two stops of precisely the same pitch, timbre and strength of tone in different divisions of an organ; or in employing one and the same stop in two different divisions. Couwenbergh in his "Nouveau System d' Orgues" cites the case of a three-manual organ in which the forty-six stops of the great, choir and pedal organs are formed by "borrowing and duplication" from six real stops. In the Hope-Jones Organ, Ocean Grove, New Jersey, seven real stops supply some one hundred twenty registers. Borrowing may be resorted to in the creation of an auxiliary pedal organ, but never to create the foundation stops of the pedal. Duplication may very rarely be indulged in: an example is the introduction of the Swell Cornopean into the Great organ, also. This is done in order that the Cornopean may be used as a solo stop with a swell organ accompaniment. This is only allowable in a small organ. Cavaille'-Coll opposed borrowing or duplication in any form whatever. There are two chief objections to borrowing and duplication: Tonal structure and appointment from a scientific viewpoint forbids that one manual create another manual or largely increase it; a stop borrowed from one manual for another, is not properly voiced for both manuals. Particularly, is this true when the borrowing is from the great manual.

The German CC theory requires that the pedal organ be provided with basses for the chief manual stops. This is, of course, the first function of the pedal organ. But another great function is to provide great contrasting volumes of tone.

Without this latter function, the harmonium would do just as well as the organ--except in degree. The great organ classics offer pedal parts that require a distinct individuality of color, of a sort that only the pedal organ has.

Every well balanced organ, then, in order to have an adequate pedal department, should contain: a suitable number of bass stops for the different classes of stops in the manual divisions--Principals, Flutes, Viols and Reeds; and also an independent collection of stops, which, while belonging to the four classes just mentioned, partake of a character that is essentially different from the tones of the manuals.

The question of bringing on "suitable basses" in the pedal with various manual combinations, has given endless trouble. Walcker constructed a double pedal board to meet the difficulty. This was too cumbersome. Others suggested separate pedal organs, with electric studs for bringing them on and off at will. In our day the whole matter has been satisfactorily solved by the adjustable combination action. This action permits endless changes of combinations with great speed by the performer.

MIXTURES IN THE ORGAN. The mixtures, or harmonic-corroborating stops are greatly underrated and misunderstood in America. In our modern organs, they are very scarce, indeed. Hope-Jones has abandoned them entirely; and he has a large following. The pipes of fundamental organ tone sound practically no overtones; therefore it is very important that these overtones should be sounded artificially when they are desired.

The organ is an ensemble instrument. Its great glory is its "grand chorus" of tone. With only the foundation tone its volume is sombre and incomplete; to give it its full grandeur, it is necessary to add the "upper work." This fills in the gaps and causes the scintillation of its magnificent harmonics.

Now, it is a well known fact that an overtone, heard together with its fundmental, is of much smaller volume than its generator. The overtones must always be kept in the background. Their action is subtle. The American builders have made the puzzling blunder of voicing their mixtures far too loud. So strong have they voiced most of them that when a single mixture stop was added to the foundation work, the fundamental tones were almost displaced by the shrill, screaming of the overtones (!). Is it any wonder that the mixtures have fallen into disrepute in American organs? Too many of our builders regard the mixtures as a means of adding power. The adding of power is only incidental; the chief purpose is to change the timbre. As soon as our builders will take the pains and the expense to construct the mixtures properly, these stops will come into favor.

In French Organs the mixtures are so arranged that the constituent parts of a mixture may be brot on singly or together. To illustrate: if we have a Cornet V Rks. sounding the unison, octave, twelfth, fifteenth and nineteenth, we can bring on the octave, twelfth, fifteenth and nineteenth singly or in pairs or trios or in any combination we desire. This gives the organist great control over the expressive forces of

his mixtures.

It is, however, not the fault of builders alone that the mixtures are so little appreciated. The organists are perhaps just as much at fault. Theydo not understand the mixtures fully themselves. Their registration is a matter of taste, not of thought. M. Alexander Cellier in the preface to his "L'Orgue Moderne" deplores the fact that organ students have no place to go to study registration scientifically and systematically. They are expected to acquire it, hit or miss, thru their own experience. Sound registration rests on scientific principles, which should be taught to organ students. This would raise the level of organ performance, generally. A judicious use of the tonal resources of an organ, requires more than ample emotion.

METHODS OF FURNISHING AIR TO THE ORGAN. The methods of providing the organ with air have undergone great changes during the last fifty years. Our mammoth modern instruments, with their high wind pressures, require powerful blowing apparatuses. In most of the continental European churches, the organs are still blown by "organ pumpers". But in England and America, many mechanical blowers have been patented, driven by water, gas, gasoline and electrical power. In the smaller organs these take the form of horizontal bellows, driven by water or electric motors. For large instruments these are unsatisfactory and rotary fans driven by electricity are used in some form quite generally. Miller in his "The Recent Revolution in Organ Building" says; "The principle of fans in series, first introduced

by Cousans, of Lincoln, England, under the name of Kinetic Blower is now accepted as standard. This consists of cleverly designed fans mounted in series on one shaft, the first delivering air to the second at, say, three-inch pressure, to be raised another step and delivered to the next in series, etc. etc. This plan permits tapping off desired amounts of air at intermediate pressures with marked economy, and as it is slow speed, and generally directly connected with its motor on the same shaft it is both quiet and mechanically efficient."

THE ORGAN CASE. It remains yet to say a word concerning the organ case. Our modern matter-of-fact world has emphasized utility everywhere. The organ case is regarded chiefly as a cover for the organ itself, and comparatively little labor and thought is spent on it. This is wrong. The organ case should be a thing of beauty and dignity, commensurate with the grandeur of the organ. It should receive the greatest attention from the builders. Our modern cases are tasteful, but not grand; the German word "hüpsch" best describes them. They savor too much of the drawing room. Our designers cannot do better than to study the many magnificent cases of the Middle Ages. These cases were such considerable works of art, that they were preserved long after the organ itself had disappeared. In fact, in some of our modern instruments the case is entirely absent, e. g. the Hope-Jones Organs.

Wonderful as the modern organ is, it still has serious deficiencies. Let these be eliminated and the Organ of the Twentieth Century shall stand revealed as one of the World's Wonders.