AN INVESTIGATION OF THE ELECTRICAL AND MECHANICAL PHENOMENA IN THE ROCHELLE SALT CRYSTAL

By

Henry W. Taylor

and

Paul R. Yoder

A Thesis submitted to the Department of Physics and the Faculty of the Graduate School of the University of Kansas, in partial fulfillment of the requirements for the degree of Master of Arts.

Approved by, Austin: Bailey

F. E. Kester

May 15, 1922

B I B L I O G R A P H Y .

Anderson, J. A.	Reports to National Research Council, March and April, 1918.
Cady, W. G.	Report to National Research Council, May, 1921.
Poynting and Thompson,	Electricity and Magnetism, Page, 148, (1914)
Valasek, W.	Piezo-Electrical and Allied Phenomena in Rochelle Salt. Physical Review, XVII, 475, 1921.
Voigt, W.	Lehrbuck der Kristallphysik, article 399, p. 801.
Wood, Harry O.	Piezo-Electrical Accelerograph Bulletin of the Seismological Society of America, XI, No. 1 March 1921.

TABLE OF CONTENTS

I N T R O D U C T I O N .

It was the purpose of this piece of research to investigate the mechanical and electrical phenomena in Rochelle salt crystals, under various temperature (temperature) conditions with especial attention directed towards the mechanical property as a function of the electrical conditions. In connection with this it was also our purpose to determine the force charge relation of the crystal and to find indications as to the way in which a charge appeared and disappeared, both on short and open circuit.

These investigations were carried on upon the same crystal and at the same time, in such a way that an accurate comparison could be made of the relation between the two. Although some work has already been done in recent years on this subject, no one has attempted so far as we know to compare the values of the mechanical and electrical propetties of the same crystal simultaneously.

*Piezo-electricity was discovered in 1880 by the

- - -

*Poynting and Thompson, Elect. and Mag. 148.

brothers, Jacques and Pierre Curie, while investigating the pyro-electrical properties of crystals. *Pyro-electricity, or the electrical effect due to temperature change, had been known for some time, having been discovered about 1700. This is a phenomena, similar to that of piezo-electricity, with the differnce that in most cases the charge due to the temperature change accumulates on the ends of the crystal. Tourmaline is the most notable example of this. Due probably to the fact that in many characteristics quartz resembles tourmaline, the Curies discovered the effect of pressure on the charge in the quartz crystal. They also noted that in the quartz crystal the compression produced the same effect as the cooling, and the dilation the same as the expansion due to heating. A great many means have been utilized in determining the charge on such crystals, but they are of such nature that they do not require relating in this paper.

SInce the date of discovery of this remarkable phenomena many crystals have been found to possess this property to a slight degree. It is generally known that in all crystals whose axes are polar, that is those

- - - -

*Voigt, W. Lehrbuck der Kristallphysik, (Art. 399, p. 801)

of which the opposite ends of an axis are not alike in the grouping of the atoms, there is at least one and, usually many directions along which the application of force will produce a charge, either on the planes where the force is applied, or on the surfaces perpendicular to this. The accumulation of electrical charges are of opposite signs on the opposite sides or ends. In most cases this effect is extremely small, but in a few it is very appreciable, and in a very few, the most notable of which is Rochelle salt, the effect is comparatively large and is far greater in one specific direction than in any of the others.

Various French and German tables* listing physical constants refer occasionally to piezo-Electricity and give only a few qualitative values for it. Poynting and Thompson, in their text on Electricity and Magnetism page 148, give a more complete discussion of it than is found in any of the standard works on physics.

Probably due to the minuteness of the charge that accumulated on the crystals, and the seeming utter

- - - -

*-Tables Annuelles de Constants, Donnes Numeriques Chemie, de Physique et de Technologie. (1910-1921)
-Landolt, Bornstein, Meyerhoffer,- Tabellen.

uselessness of them, the interest in this subject died down in the late nineties, and it has been only in the last decade that attention has again been turned to it. During the war Rochelle salt crystals were investigated with the idea in view, of using them in sensitive microphones, but no very practical results were obtained.

W. G. Cady[1] of Wesleyan University, Middletown Connecticut, is among the investigators of this country who, during the past few years, have inquired more carefully into the properties of the crystal and made determinations of the constants. J. Valasek[2] of Minnesota, demonstrated that the dilation of the crystal could be brought about by applying a potential difference between the surfaces of the crystal, and also showed that there existed a permanent polarization in the natural state so that it affectively caused a hysteresis effect in the crystal. Anderson[3] and Wood[4] made investigations purely with the ideas in view of adapting the crystal to signal and seismographic uses respectively.

- - - -

(1) Reports to the National Research Council, May 1918.
(2) Physical Review, XVII, 475, 1921.
(3) Reports to the National Research Council, March and April, 1918.
(4) Bulletin of the Seismological Society of America, XI, No. 1, March 1921.

P R E P A R A T I O N .

The problem was to arrange apparatus in such a way that the crystal could remain inside the container throughout the entire experiment, and the conditions be kept constant for the different phases of the problem. Not ~~was~~ only was it decided that conditions must be kept constant while working the mechanical and electrical relations, but that the instrument should be so arranged as to allow the determinations of the values of the modulus and quantity of charge at the same time. This was the innovation over methods used in investigating the problem previously.

With the above requirements in view it is readily seen that a device must be used which would apply the force evenly and regularly, and with suitable variation; that a second device must be arranged to measure the modulus, which since the charge was liberated by means of a force, must of necessity be a means to measure the compression of the crystal when the force was applied. On account of the limited space under the bell jar, the Michelson interferometer could not be used, and it was found necessary to devise a small interferometer, involving the half silvered mirror idea of the Fabry and

Perot instrument.

The solenoid was selected as the most advisable means of applying the force to the crystal, because the control could be easily made from the outside. Since there is no very definite general formula for the force of attraction of the plunger towards the center of the solenoid, some sort of arrangement was necessary to determine the value of the force applied, to the crystal for a given current through the solenoid. To do this the Jolly balance spring was decided upon. The plunger therefore was suspended from the lower end of the spring, Figure (4).

All of the apparatus mentioned above was contained inside of a glass and metal case, and the atmosphere could therefore be easily controlled.

As a means of measuring the quantity of the charge a Leeds and Northrup galvanometer with a sensitivity factor of 2241 megohms, was considered adequate. This galvanometer had a critical damping resistance of 8100 ohms, with a resistance of 525 ohms, and period of 5.85 seconds.

E X P E R I M E N T A L W O R K .

Rochelle salt crystallizes in the hemihedral form as distinguished from hemimorphic class of the orthorhombic system. The form is that of an orthorhombic prism, whose Miller symbols are (1,1,0), (,1,0), (0,1,0) and for the basal pinacoids (0,0,1). That is Rochelle salt belongs to a class in which the crystal forms are referred to the three axes at right angles to each other, but in which the planes of the simplest prismatic bounding surfaces, in their ideal natural developement, intercept these axes at different distances from the common center of the crystal, so that in crystallographic language, the axial ratio is, : : , Figure (1). This class has no center of symmetry, consequently the two ends of each principle axis, or of any direction through the crystal, are unlike in respect to physical properties. Therefore each axis is a piezo-electric axis.

Since all of the principle axes are polar, there are many ways in which the plates would be cut from the crystal, to yeild the piezo-electric effect. However the best way is considered to be that given as follows:

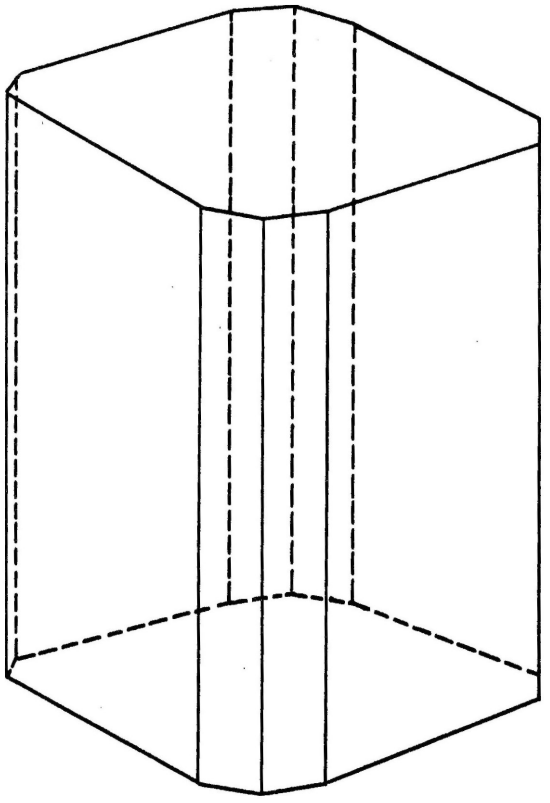

Fig. 1.

A thin plate of given thickness (t), was cut from the crystal in the (bc) plane, and from this thin plate a long slim slab, of length (L), and width (w), was cut so that its sides were inclined to the edge with an angle of 45°, hence in the (bc) plane the crystal slab was inclined at an aggle of 45° to the (b) and the (c) axes, Figure (2).

The crystal is so very brittle and easily broken that great care had to be excercised in the preparation of it. The cutting was done with a wet thread, which dissolved the crystal away. This had to be done so slowly that a device was contrived to run an endless thread, immersed at one point in water, by means of an electric motor, continually over the crystal. By means of an adjustment to slip the crystal along, the thickness of the slab could be carefully controlled. Figure (3) explains this device amply. After the sample was cut out it was gently ground to even surfaces on a glass plate with emery, and was then scrapped with a sharp razor blade and was finally polished with water.

The flat sides of the crystal slab so prepared, were covered carefully with a very thin coat of tinfoil, cemented on with asphalt cement prepared in the

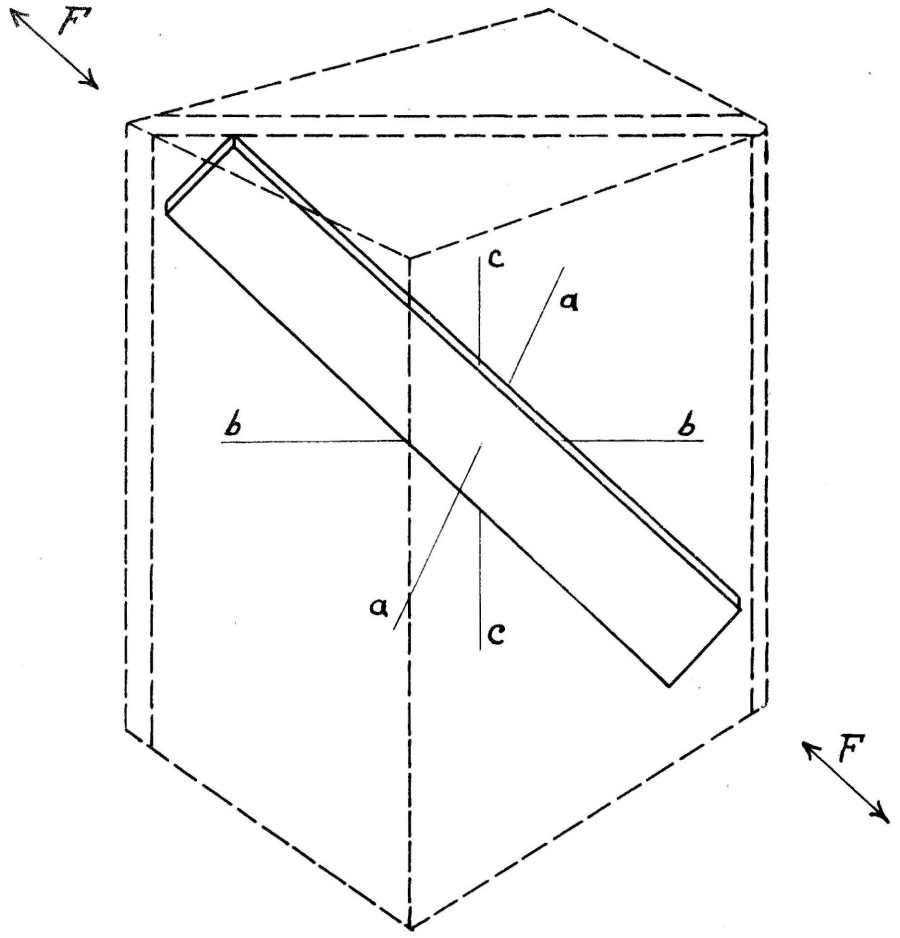

Fig. 2.

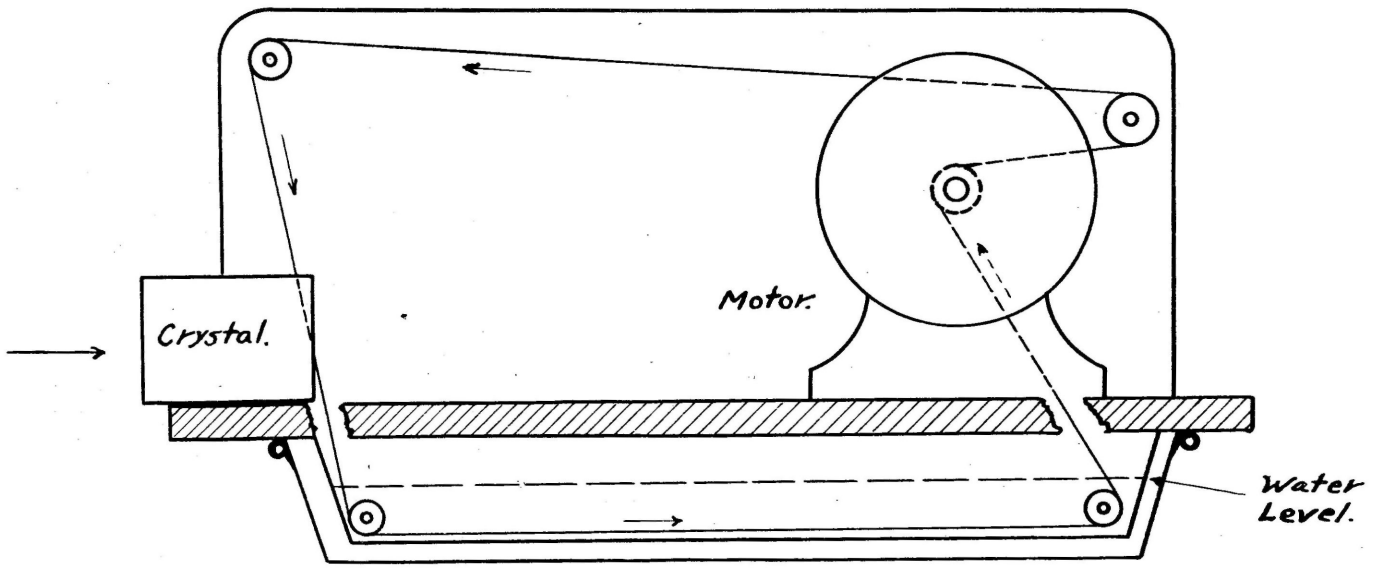

Fig. 3.

following manner: A piece of asphalt gum was ground to a fine powder, and dissolved in Benzene, (C_6H_6) forming a very tenacious and rapidly drying cement. Benzene was particularly desireable as a solvent because it apparently in no way affected the crystal. Shellac was not used because it was feared that the alcohol which dissolved the shellac, would alter the crystallographic structure of the surface, and possibly alter the constants determined.

The relation existing between the charge and the dimensions of the crystal and the force applied, as given by Harry O. Wood* , is

$$Q = K L F / t$$

- where (Q) is the charge, (K) is the piezo-electric modulus, (L) the length, (F) the force, and (t) the thickness. It is readily seen from this equation that the width makes no difference in the charge produced, so for the most accurate results, the crystal should be as long as possible, thin, and as narrow as is mechanically convenient, and safe, in order that the shrinkage be of the magnitude sufficiently large to be accurately measured.

- - - -

* Bulletin of the Seismological Society of America, XI, No.1, p. 20, (1921)

Crystal Compressor.

Figure (4) is a cut showing the general scheme of the construction of the instrument which was used in applying the force. The base was of very strong and substantial wood, so that it would not be appreciably altered by changing weather conditions. Upon this base was mounted, first the secondary hard rubber base which supported the upright solenoid and the interferometer. The latter will be described later. This rubber plate was polished so that a bell jar when well greased would make a firm airtight joint. From three equally spaced points near the edge of the wooden base, three supports arose meeting in the center, about one hundred and twenty centimeters above the base. On top of these supports a windlass was mounted which could be used to lower and raise the Jolly balance when measuring its elongation. The Jolly balance was surrounded by a glass tube, which by means of rubber washer and cap was sealed to the bell jar, thus preventing the air currents from changing the local conditions. Both the wooden and the rubber base could be accurately leveled by means of leveling screws, so that the soft iron plunger hung directly centered in the solenoid, and the central opening, in

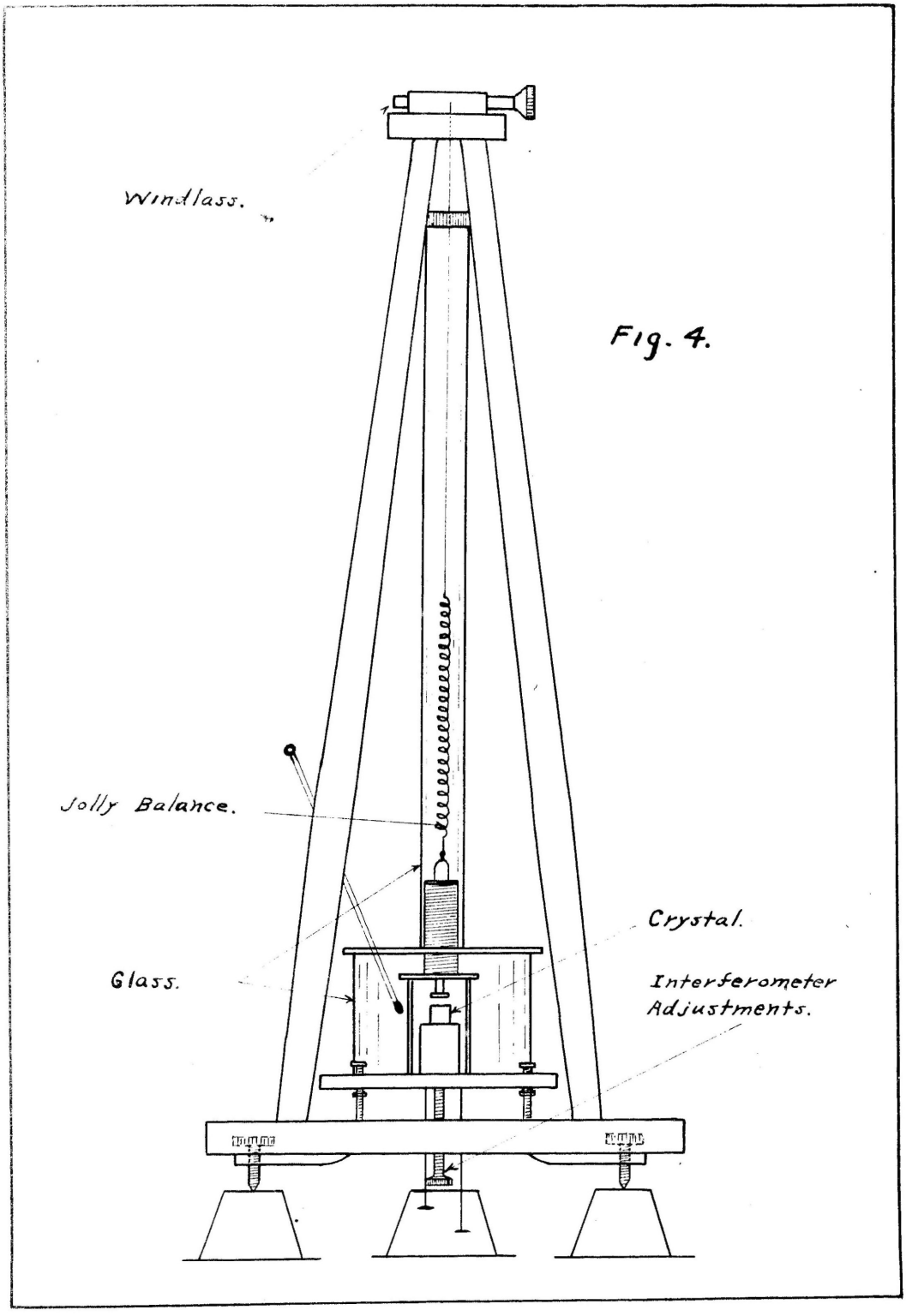
Windlass.
Jolly Balance.
Glass.
Crystal.
Interferometer
Adjustments.

Fig. 4.

turn was exactly vertical. By this means the plunger was enabled to hang freely in the opening. A further adjustment was arranged on the plunger which permitted the most advantageous position of the plunger in applying the force to the crystal.

Interferometer.

The interferometer was constructed on a small steel base about three centimeters wide and nine centimeters long and one centimeter thick. Near the center of this plate was placed an upright support with an adjustable bridge which moved quite firmly in a brass track, along the vertical direction and could be adjusted by means of the screw (a) Figure (5). This support was sharpened to a very fine knife edge so that the optical lever of the interferometer would have a firm , easy and definite fulcrum over which to rotate, when the crystal (c) was compressed.

Upon the outer end of this optical lever there was attached a 40 percent silvered mirror, so that it would respond to the movement of the lever. Directly beneath this upon another auxiliary table, built up so

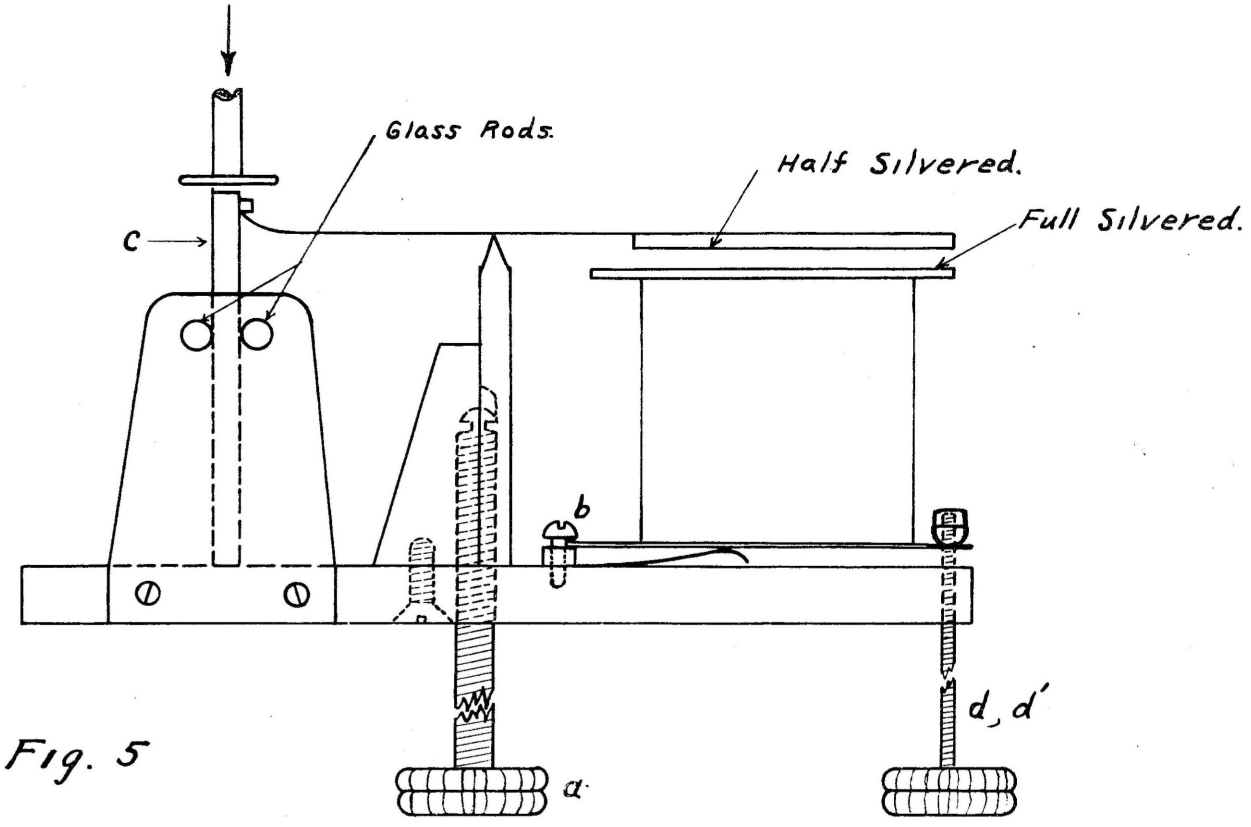

Fig. 5

that it supported a full silvered mirror, within one-half millimeter of the half silvered mirror. This table was securely fastened at the rear, (b), and the front corners adjustable by means of the two screws (d) and (d'), so that by the use of the large screw (a) and the two small screws (d) and (d') the two mirrors could be brought into exact parallelism. These adjustments were brought out through holes in the base and adjustment made from underneath the entire instrument. Upon the rear end of this rectangular steel plate a support was arranged for the crystal in the form of brass pillars attached to the sides of the plate. Near the tops of these pillars two holes were drilled a distance apart corresponding to the thickness of the crystal. Glass rods were placed crosswise through these holes, and the crystal placed between them, Figure (5). As a precaution against having a film of cement between the crystal and the steel plate, the crystal was placed in postion between these rods and a heavy weight placed on it, then cement was coated around the base. It is to be noted that the crystal was supported directly beneath the solenoid when finally placed in the instrument.

In order that plane parallel light could be thrown into the interferometer, the first bell jar that was used

had to be discarded and a new one substituted, Plate I. This bell jar was made from the cylindrical portion of a large bottle ground so that it would make airtight joints with the rubber base and the iron plate (a) Figure (6). A full silvered mirror placed at an angle of 45° over a hole in the iron plate directly above the interferometer, reflected plane parallel light to the mirrors below.

As a source of monochromatic parallel light, of known wavelength, a sodium flame was used; this was thrown through a simple lens with the flame at the focal length of the lens so that the light transmitted to the interferometer would be plane parallel. A rectangular piece of plate glass was used to throw the light to the 45° mirror on top of the bell jar. The fine filament wires of an incandescent light were used to adjust the mirrors to a position near where the interference bands appeared. The movement of the bands was observed by counting them as they passed the cross hairs of a telescope which was placed behind the rectangular piece of plate glass. This permitted an accuracy, in measuring the compression of the crsytal slab, of a few tenths of a wavelength.

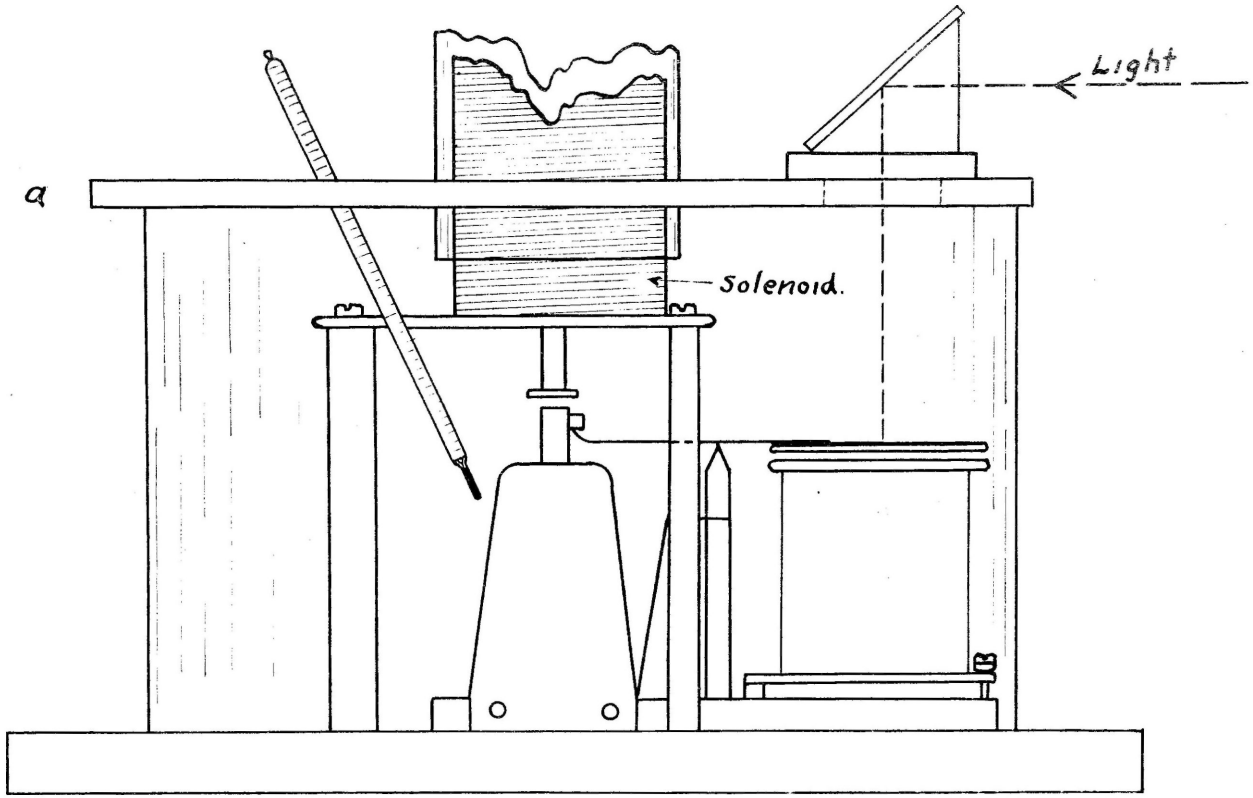

Fig. 6.

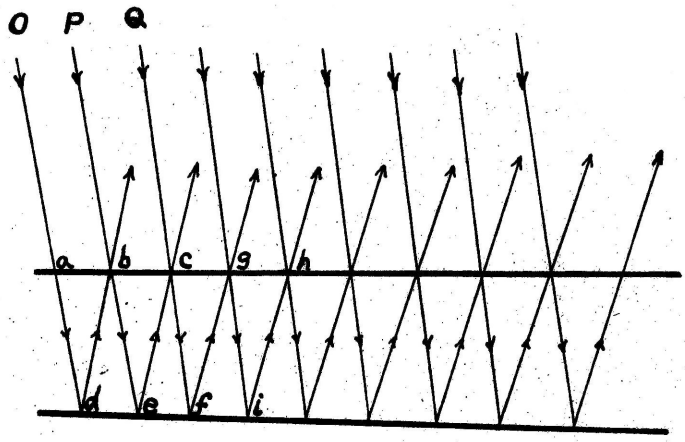

At (B) light from (P) is $(n + \frac{1}{2})$ wave-lengths ahead of same light from (O) thru AOB. There is interference and dark bands result.

At (C) light from (Q) is $(n + 1)$ wave-lengths ahead of same light from (P) thru BEC. There is reinforcement and light bands result.

Shift of dark to dark, or light to light means, 1λ difference in path.

Figure 7.

Calibration of Solenoid

In order to measure the force exerted by the solenoid on the crystal for different values of current it was necessary to calibrate it by means of a Jolly balance spring. Figure (4) shows the location of the spring in the instrument. According to Hook's law the elongation of the spring, within the elastic limits, is proportional to the force causing it. Now by determining the constant of the spring, by means of a known force and its corresponding elongation, the force producing any given elongation may be calculated. While the plunger was resting on the crystal, the solenoid current was turned on and the Jolly balance spring stretched by means of the windlass on top of the stand, to the length at which the force of the spring just overcame the force of the solenoid. The elongation was then carefully measured by means of a cathotometer, which was as close as possible to the instrument, to eliminate all possible errors, and was accurate to within .5 of a millimeter.

Using different values of current measured by a Weston model 280 ammeter, the solenoid was calibrated

in the above manner. Table (1) gives data of this calibration as recorded in the laboratory note book. Figure (8) is the curve represented by this data. The constant force per centimeter elongation, calculated from the elongation of the spring, casued by the weight of the plunger, equals 26,900 dynes.

It was difficult to control the current in the solenoid so that there would be no error in the forces applied. This was especially true for the higher values of the current, and it may be noted that from the solenoid calibration curve, a small variation in the current for the higher values would make a great effect on the forces.

May 13, 1922.

TABLE, (1)

Calibration of Solenoid.

Force	Lower	Upper	Length	Elongation
No load	9.56	48.38	38.82	- -
Plunger	18.19	59.53	41.34	2.52
2 amps.	9.64	53.00	43.36	4.54
3 amps.	9.64	55.60	45.96	7.14
4 amps.	9.64	60.34	59.70	11.88
5 amps.	9.64	63.90	54.26	15.44
6 amps.	9.64	69.63	59.99	21.17
7 amps.	9.64	75.21	65.57	26.75
8 amps.	9.64	84.30	74.66	35.84
9 amps.	9.64	92.98	83.34	44.52

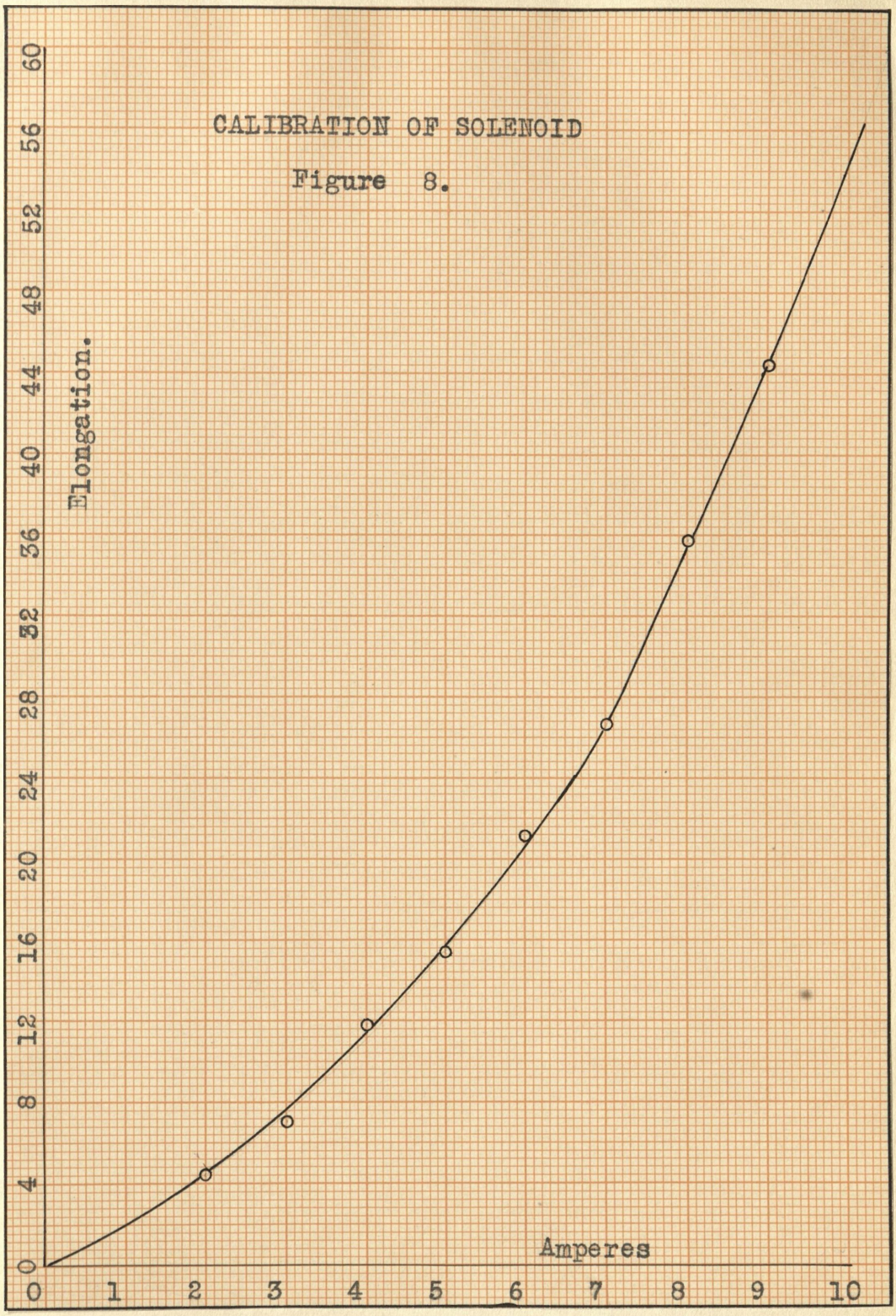
CALIBRATION OF SOLENOID
Figure 8.
Elongation.
0
4
8
12
16
20
24
28
32
36
40
44
48
52
56
60
Amperes
0
1
2
3
4
5
6
7
8
9
10

Calibration of Galvanometer.

The electrical phenomena which appears on the surface of the crystal, is of the nature of a charge, rather than a source of continuous current. Making the assumption that the charge is liberated within the period of the galvanometer, it must then be calibrated for charge rather than for current.

The condenser method was used for this calibration, since it is the simplest and most accurate way of determining the quantity values of a charge. Figure (14) shows the connection for the set-up of this arrangment. Tables (2,3, and 4) in connection with Figure (9) show this calibration to be a straight line where one centimeter deflection equals, 7.37×10^{-9} coulombs, or stated in an equation,

$$K / \text{cm.} = 7.37 \times 10^{-9} \text{ coulombs...}$$

The galvanometer was left on suspension throughout the entire investigation, and was insulated by mounting all the instruments in that circuit on heavy glass plates. Airline connections were used to avoid stray currents due to poor insulation.

TABLE (2) May 6, 1922.

Calibration of Galvanometer.

Volts	M. F.	Charge	Deflection
.03	.1	3×10^{-9}	.45
.06	.1	6	.88
.09	.1	9	1.3
.12	.1	12	1.8
.15	.1	15	2.2
.18	.1	18	2.5
.21	.1	21	2.9
.24	.1	24	3.4
.27	.1	27	3.7
.30	.1	30	4.1
.33	.1	33	4.5
.36	.1	36	4.9
.39	.1	39	5.4
.42	.1	42	5.7
.45	.1	45	6.1
.50	.1	50	6.7
.60	.1	60	8.2
.70	.1	70	9.5
.80	.1	80	10.8
.90	.1	90	12.3
1.00	.1	100	13.6
1.10	.1	110	15.0
1.20	.1	120	16.6
1.30	.1	130	17.7
1.40	.1	140	18.8
1.50	.1	150	20.8

May 6, 1922.

TABLE (3)

Calibration of Galvanometer.

Volts	M. F.	Charge	Deflection
.1	.05	5×10^{-9}	.7
.2	.05	10	1.3
.3	.05	15	2.1
.4	.05	20	2.8
.5	.05	25	3.4
.6	.05	30	4.1
.7	.05	35	4.6
.8	.05	40	5.6
.9	.05	45	6.1
1.0	.05	50	6.7
1.1	.05	55	7.4
1.2	.05	60	8.1
1.3	.05	65	8.8
1.4	.05	70	9.5
1.5	.05	75	10.2

May 6, 1922.

TABLE (4)

Calibration of Galvanometer.

Volts	M. F.	Charge	Deflection
.1	.2	20×10^{-9}	2.7
.2	.2	40	5.6
.3	.2	60	8.2
.4	.2	80	10.7
.5	.2	100	13.4
.6	.2	120	16.1
.7	.2	140	18.8
.8	.2	160	21.5
.9	.2	180	24.3
1.0	.2	200	26.0

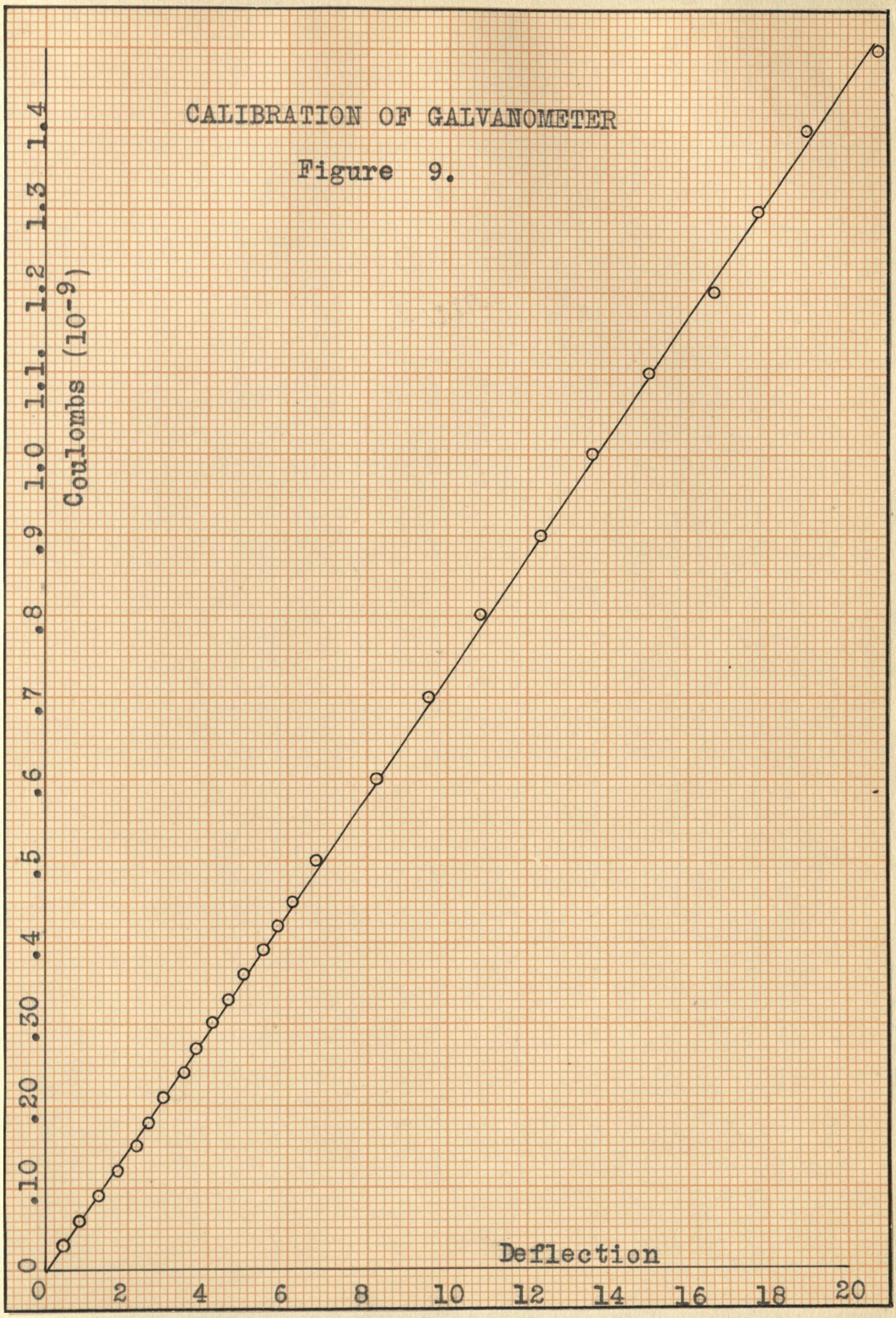
CALIBRATION OF GALVANOMETER
Figure 9.
Coulombs (10^{-9})
0
.10
.20
.30
.4
.5
.6
.7
.8
.9
1.0
1.1
1.2
1.3
1.4
Deflection
0
2
4
6
8
10
12
14
16
18
20

There may be a slight error in the electrical effects, of a few percent, due to the fact that the charge may not be entirely given up within the ballistic period of the galvanometer. Table (5) gives the most direct hints as to this.

Humidity and Temperature Control.

In all the previous work done on this problem great discrepencies arose due to the changing of vapor and temperature conditions. There was need therefore that some precautions be made in order that the humidity be held at some constant value. To do this a solution of 84.5% sulphuric acid* was used, but which gave very unsatisfactory results. When the temperature was raised to a value of near 25°C. there would appear a condensation on the inside of the bell jar, presumably due to the cooler temperature on the outside. Furthermore there were stray charges produced insome unaccountable way, which caused much trouble with the galvanometer. These difficulties were overcome when calcium chloride was substituted for the sulphuric acid. The vapor

- - - - -

* Tabellen, page 166, table 74.

pressure of the crystal was maintained constant by coating it with the asphalt cement prepared as already explained.

Through the iron plate on top of the bell jar a hole was drilled through which a sensitive thermometer was placed so that the bulb was within a few millimeters of the crystal, thus making careful temperature observations possible. The thermometer would not however register any possible momentary increase in the temperature due to the force being applied to the crystal. Iron served the purpose adequately for use in the plate on top of the bell jar, since it was a fairly good conductor heat. To cool the inside of the bell jar, metal cups containing ice and salt were placed on top of this iron plate. The cool air at the top caused convection currents which tended to keep the temperature throughout the jar reasonably even. Figure (6) shows the relative side elevation of the bell jar as it was used in the experiment. (Ice and salt containers not shown in Fig.)

Throughout the entire experiment there was also a thermometer (not shown in figure) placed above the solenoid to indicate the temperature of the coil, that excessive heating might be avoided.

Proceedure.

Upon completing the details of the instrument and preparation for the actual determinations, conditions were brought to equilibrum. In running the force charge curves, the interferometer was not read; the temperatures were kept as nearly constant as was possible by the brine vats placed on the iron plate on top of the bell jar. The solenoid current, the galvanometer deflections and the temperatures were the only things read in this part of the investigation.

In the temperature charge curves the solenoid current was kept at a constant value, and the deflections noted for decreasing temperatures. A decreasing temperature was used because the instrument, which was not designed for minute temperature control, gave more consistant results when cooling, than when heating. Different values of solenoid current made possible several distinct curves for this relation.

In determining Young's modulus, a sudden application of the force would have made the bands move so rapidly that it would have been impossible to count them. It was therefore necessary to increase the

current steadily from the zero value to the maximum, so that the movement of the bands would be well within the range of distinctness. To discover if there was any consistant appreciable effect of temperature change on the modulus, both thermometers were read for each value. The time taken in covering the range of currents from zero to ten amperes would not in any case exceed five seconds.

The time, both for short circuit and for open circuit, necessary for the charge to dissipate itself was noted, and its results are to be found in Table (5), and discussed further in the Results.

R E S U L T S .

Table (6) gives data as recorded in the laboratory of the force charge values. Figure (10) is the curve which represents in graphical fashion these results. When values of forces interpolated from the solenoid calibration curve, are plotted against the charges interpolated from the galvanometer calibration curve, as shown in Figure (11), it shows a constant relation existing between the force and the charge, which verifies the formula previously quoted from Wood, that the charge is directly proportional to the force.

It is interesting to note that the points which lie below the curve are points with temperatures above the mean and those above the curve correspong to points whose temperatures are below the mean. The temperature curves which follow, clearly indicate that, qualitatively at least, these points would be moved nearer to the curve if corrections were made for the variation in temperature.

Tables (7), (8) and (9) give data as recorded in the laboratory for variations in charge due to temperature change, when the force remains constant. Figure (12)

May 13, 1922.

TABLE (5)

Charge Time Data.

Temp. 22°C. 6 amps. Deflect 10 cm. (open) Leak 4 sec. and deflects 1 cm.

Temp. 22°C. 6 amps. Deflect 17 cm. (short) Leak 4 sec.- deflects 1.6 cm.

May 12, 1922.

TABLE (6)

Force Charge Values.

Coil Temp.	Crystal Temp.	Deflect.	Current	Force
24.4	23.4	1.17	2.0	4.2 X 26900
24.4	23.5	1.47	2.3	4.8
24.4	23.5	2.02	2.7	6.3
24.0	23.6	3.23	3.4	8.7
23.9	23.6	4.35	3.85	10.8
23.9	23.45	6.3	4.7	14.1
24.1	23.35	7.1	4.9	15.0
24.2	23.3	7.7	5.0	15.44
24.3	23.2	8.6	5.2	16.2
24.5	23.2	8.9	5.3	16.7
25.0	23.2	9.6	5.5	18.0
25.2	23.2	10.1	5.7	19.2
25.4	23.2	10.6	5.9	20.4
25.4	23.2	11.7	6.1	21.3
25.5	23.2	12.7	6.5	23.4
25.5	23.2	13.2	6.7	24.6
25.9	23.3	15.2	7.4	30.0
26.0	23.4	16.0	7.5	31.2
26.1	23.3	19.1	8.4	39.0
26.2	23.3	21.0	9.0	44.6
26.6	23.3	25.6	10.0	54.0

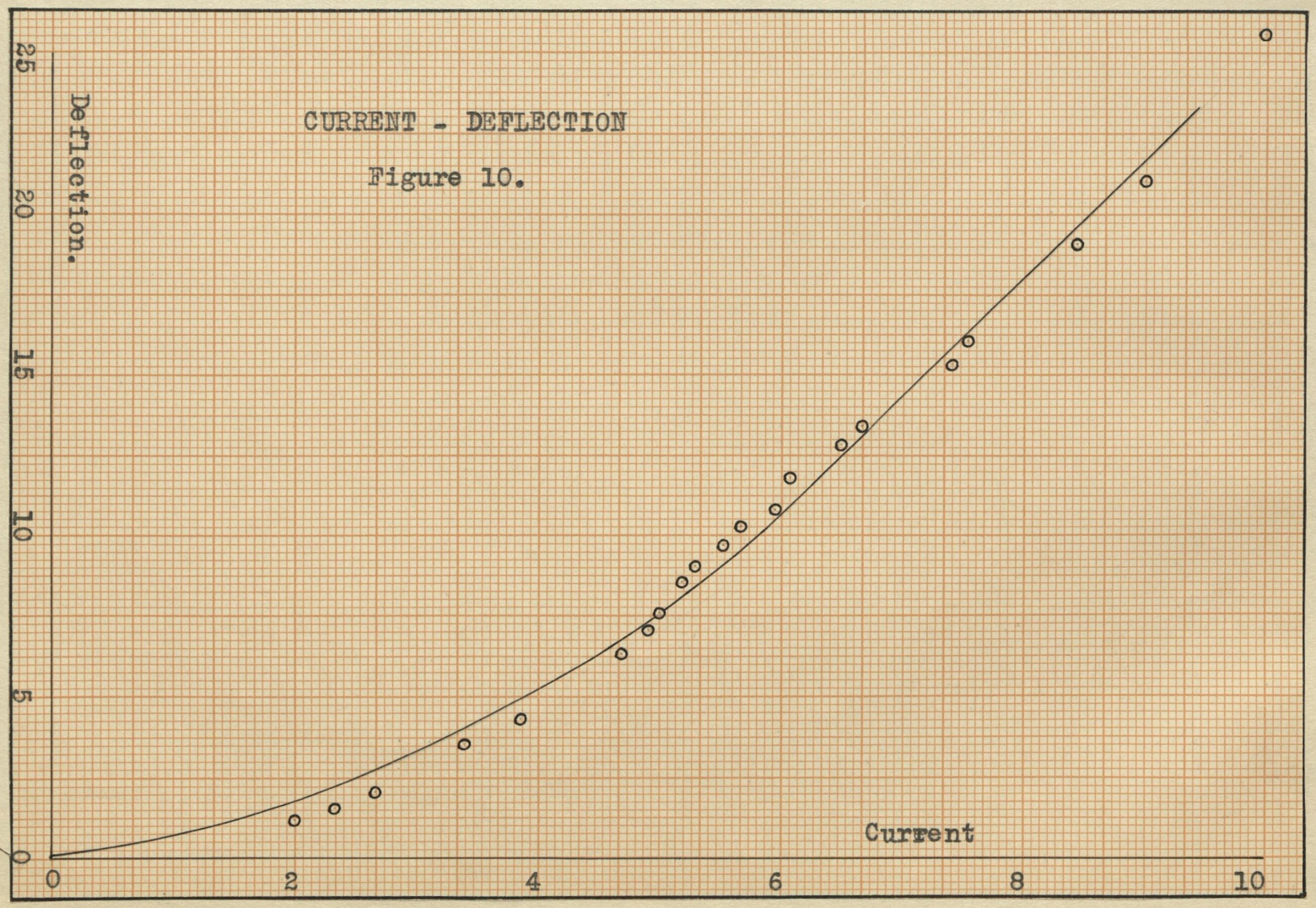

CURRENT - DEFLECTION

Figure 10.

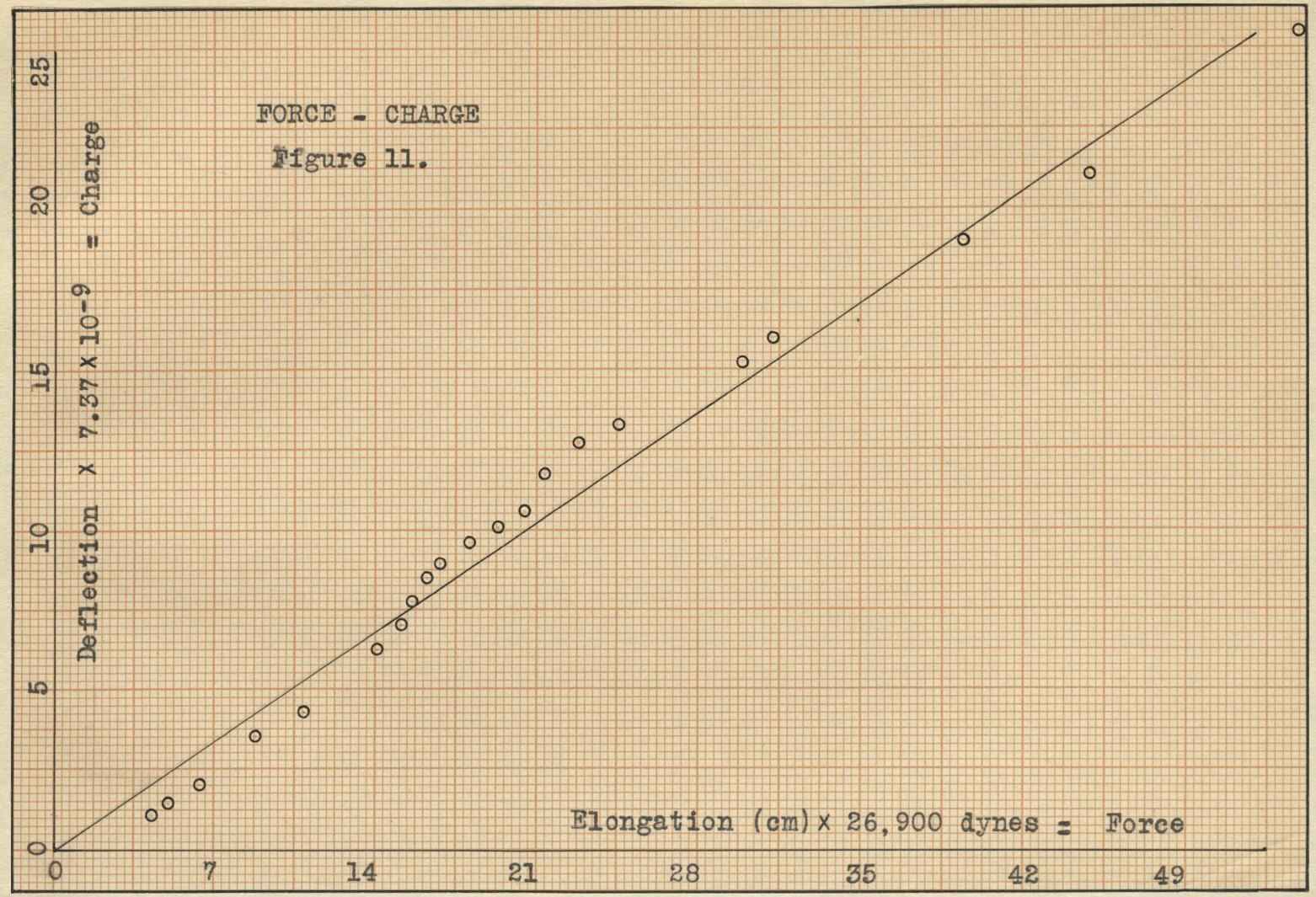
FORCE - CHARGE
Figure 11.
Deflection X 7.37 X 10-9 = Charge
0
5
10
15
20
25
Elongation (cm) X 26,900 dynes = Force
0
7
14
21
28
35
42
49

May 13, 1922.

TABLE (7)

Temperature Charge Table.

Coil Temp.	Crystal Temp.	Deflect.	Current
32.0	25.3	1.00	3
29.0	24.7	1.15	3
28.0	24.0	1.40	3
27.3	23.7	1.50	3
26.9	23.3	1.75	3
26.0	22.8	2.12	3
25.2	22.4	2.70	3
24.8	22.0	3.85	3
24.0	21.6	4.30	3
23.5	21.2	4.90	3
23.0	20.8	5.20	3
22.2	20.4	5.45	3
21.8	20.0	5.30	3
21.3	19.7	5.20	3
21.0	19.5	5.10	3
20.7	19.3	5.00	3
20.4	19.0	5.05	3
19.9	18.7	4.90	3
19.0	18.4	4.85	3
18.5	18.0	4.85	3
18.0	17.7	4.70	3
17.6	17.4	4.60	3
17.2	17.2	4.45	3
17.0	17.0	4.35	3
16.8	16.8	4.30	3
16.6	16.6*	4.30	3
16.5	16.5	4.10	3
16.2	16.2	3.90	3
16.0	16.0	3.80	3

* Not plotted.

May 13, 1922.

TABLE (8)

Temperature Charge Data.

Coil Temp.	Crystal Temp.	Deflect.	Current
32.0	25.1	4.8	6
31.0	24.8	5.0	6
29.0	24.3	5.7	6
28.5	23.5	7.4	6
27.5	23.1	9.0	6
27.0	22.8	10.2	6
26.5	22.4	10.7	6
26.0	22.1	12.8	6
25.8	21.8	14.2	6
25.5	21.7	15.3	6
25.3	21.5	16.3	6
25.2	21.4	17.1	6
25.0	21.2	17.7	6
24.8	21.0	18.1	6
24.6	20.9	18.8	6
24.4	20.7	19.5	6
24.0	20.6*	19.7	6
23.8	20.4	20.0	6
23.8	20.2*	20.2	6
23.6	20.1	20.5	6
23.5	20.0*	20.7	6
23.5	19.8	20.7	6
23.3	19.6*	20.5	6
23.0	19.5	20.3	6
23.0	19.2	20.0	6
23.0	19.0	19.9	6
23.0	18.9*	19.8	6
23.0	18.7	20.0	6
23.0	18.5*	19.8	6
23.0	18.4	19.7	6
22.5	18.3*	19.7	6
22.5	18.0*	20.3?	6
22.3	18.0	19.7	6
22.0	17.7	19.7	6
22.0	17.5	18.9	6
22.0	17.5*	19.4?	6
21.5	17.4*	18.7	6
21.0	17.2	18.3	6
20.0	16.9	17.7	6
20.0	16.6	18.0	6
20.0	16.0	17.7	6

May 13, 1922.

TABLE (9).

Temperature Charge Data.

Coil Temp.	Crystal Temp.	Deflect.	Current
30.0	25.2	6.7	9
32.0	25.1*	6.9	9
31.5	25.0	7.2	9
31.0	24.8	7.7	9
30.8	24.4	8.2	9
30.5	24.1	8.7	9
29.5	23.7	9.2	9
29.5	23.5	9.8	9
29.2	23.2	10.5	9
28.9	22.9	11.5	9
28.6	22.7	12.4	9
28.6	22.6*	12.9	9
28.5	22.4	14.3	9
28.0	22.2	16.0	9
27.9	22.1	17.1	9
27.7	22.0	18.3	9
27.6	21.8	19.5	9
27.6	21.7*	21.0	9
27.7	21.6	22.0	9
27.8	21.5	23.5	9
27.8	21.3	25.0	9
27.8	21.2*	26.3	9
27.5	21.1	27.2	9
27.5	21.0*	28.3	9
27.5	20.9	29.4	9
27.5	20.8*	30.2	9
27.6	20.8*	31.3	9
27.3	20.7	31.9	9
26.5	20.5	33.1	9
26.0	20.2	34.5	9
26.0	19.9	34.8	9
26.0	19.7	35.3	9
25.8	19.5	35.5	9
25.5	19.4*	35.3	9
25.5	19.1	36.4	9
25.2	18.9	37.0	9
25.0	18.7*	36.8?	9
25.0	18.5	39.0	9
25.0	18.4*	38.5	9

Table (9). (Continued)

25.0	18.3	38.5	9
25.0	18.1	38.3	9
25.0	17.9*	37.9	9
24.5	17.8	38.0	9
24.0	17.4	37.9	9
22.0	17.0	37.7	9
21.2	16.6	37.7	9
20.0	16.1	36.4	9
20.0	16.3	37.0	9
18.5	15.7	36.3	9
15.0	14.9*	32.4	9

May 12, 1922.

TABLE (10).

Young's Modulus Data.

Coil Temp.	Crystal T.	Bands	(λ)	Current	Modulus
OPEN					
27.8	23.4	5.4	2.7	10.0	$.959 \times 10^{11}$
30.0	23.4	5.0	2.5	10.0	1.036 "
30.0	23.3	4.4	2.2	10.0	1.177 "
32.0	24.0	6.0	3.0	10.5	.959 "
27.0	22.5	4.0	2.0	10.0	1.295 "
27.0	22.5	4.4	2.2	10.0	1.177 "
33.3	22.6	4.0	2.0	10.0	1.295 "
21.6	17.0	4.0	2.0	10.0	1.295 "
23.0	21.4	4.0	2.0	10.0	1.295 "
27.0	23.0	4.0	2.0	10.0	1.295 "
		Average	- - - - - - -		1.178 "
SHORT					
30.9	23.4	9.5	4.75	10.0	.545 "
29.5	23.4	9.0	4.5	10.0	.576 "
30.0	23.3	10.0	5.0	10.0	.518 "
29.0	22.5	12.0	6.0	10.0	.432 "
33.3	22.6	9.5	4.75	10.0	.545 "
35.0	22.9	9.0	4.5	10.0	.576 "
23.8	17.8	10.0	5.0	10.0	.518 "
22.2	22.2	13.0	6.5	10.0	.398 "
33.0	22.2	12.0	6.0	10.0	.432 "
29.0	23.3	12.0	6.0	10.0	.432 "
		Average	- - - - - - -		.497 "

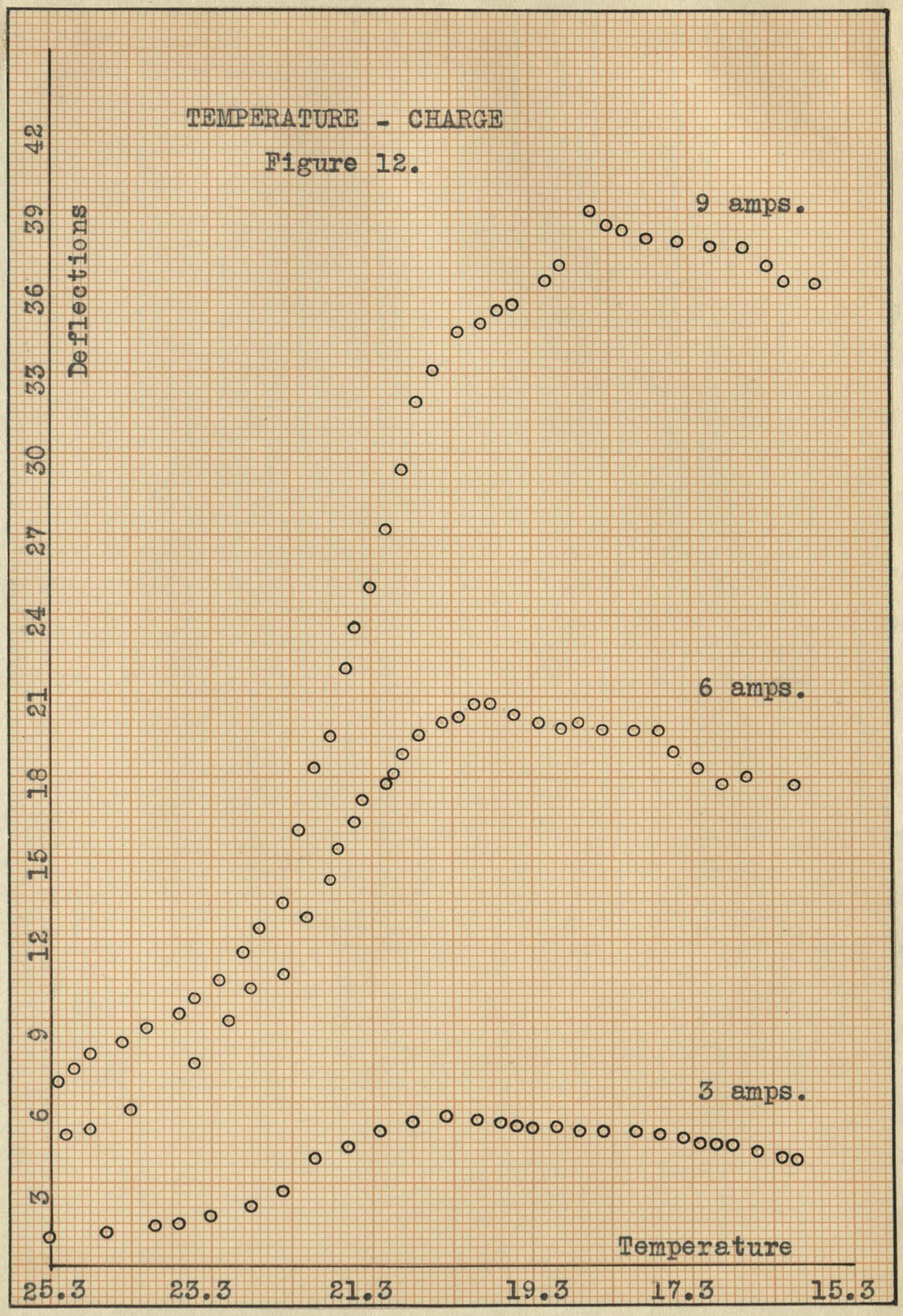
TEMPERATURE - CHARGE
Figure 12.
Deflections
3
6
9
12
15
18
21
24
27
30
33
36
39
42
9 amps.
6 amps.
3 amps.
Temperature
25.3
23.3
21.3
19.3
17.3
15.3

shows the curves plotted from this data. There is a genreal consistancy in the shape of the three curves.

Referring to the calibration of the galvanometer, Figure (10), the charge per unit deflection is given as 7.37×10^{-9} coulombs. Using this value the minimum charge given off, Table (7) line 1, equals 7.37×10^{-9} coulombs. Using the Maximum deflection, Table (9) line 38, the greatest charge given off was 2.87×10^{-7} coulombs.

Table (10) shows data as recorded in the laboratory for Young's modulus, the last column giving values as calculated from the formula*,

$$M = F L / a e$$

- where (M) is the modulus, (F) the force, (L) the length of the crystal, (a) the area of the cross section, and (e) the displacement. Values of crystal dimenstions from Table (11) were used in the above calcualtions. The average value for the modulus when there is no release of the electrical strain, is equal to, $(1.178 \pm .15)\ 10^{11}$ dynes per square centimeter. The average value when the electrical strain was relieved by short circuiting the tinfoil coatings, is equal to, $(.497 \pm .07)\ 10^{11}$ dynes/cm.^{2}

* Poynting and Thompson, Properties of Matter, p.71.

May 12, 1922.

TABLE (11).

Crystal Dimensions.

	Thickness	Width	Length
	.289	1.715	4.5
	.286	1.742	
	.300	1.742	
	.310		
	.310		
Average -	.299	1.733	4.5

Area of tinfoil = Width times length.

Weight of Plunger = 69.18 grams.

$\frac{\text{Crystal - Fulcrum}}{\text{Fulcrum - Mirror}}$ = 2.58 / 3.00 (cm.)

May 13, 1922.

TABLE (12)

Humidity Data.

Condition.	Coil. Temp.	Crystal Temp.	Defaect.	Current
Dry	21.0	21.0	11.7	6.0
Wet	22.3	22.3	20.2	6.0
Wet	22.4	22.4	19.7	6.0
Wet	22.8	22.8	18.5	6.0
Wet	23.8	23.0	17.3	6.0
Dry	23.5	23.0	15.4	5.8
Dry	23.5	23.0	17.0	6.0
Dry	24.0	23.0	17.6	6.0
Dry	2.40	23.0	16.5	6.0
Dry	26.0	22.9	15.2	6.0

In Table (5) it seems that there is a very interesting fact hidden, which if considered carefully will lead to some very definite conclusions regarding the nature of piezo-electricity. In the first line of the table where the galvanometer was closed four seconds after the force had been applied to the crystal, there remained suffieient charge to cause the deflection of ten percent of the normal value at that force and temperature. This would, at first glance, indicate that at the end of this time, - 4 seconds, - all but the last ten percent of the charge had leaked away. The second part of this table, however brings to view a fact that seems contradictory to this. When at the end of four seconds after the force had been applied to the crystal, the key short circuiting with negligible resistance the two plates on the crystal, was opened there still remained about tenpercent of the normal charge. Now if the appearance of the charge was simultaneous with the application of the force, and it gradually leaked off through the internal conduction and poor surface insulation, the short would have, at the end of four seconds, annihilated the charge completely. But since it did not, it would seem to indicate that the charge is more of the nature of a volume effect than a surface effect.

S U M M A R Y .

From the evidence gathered from the data it would appear that, (a) the charge bears some relation to the temperature, and at certain temperatures the charge reaches a maximum value; (b) the Young's modulus, so far as can be determined, is in no way influenced by the temperature; (c) the Young's modulus of the crystal is closely connected to the electrical strain which may exist; (d) the generation of the charge appears to extend over a finite period of time, and if not conducted off during this time, a readjustment probably takes place by reason of the molecules arranging themselves in such a fashion that the strain is relieved, which allows the free electrons to regain a position of equilibrium.

In concluding the writers wish to express their indebtedness to the Physics Department of the University of Kansas for making possible this investigation, to the General Electric Company for aid in supplying crystals, and to Mr. J. D. Stranathan for tracing the drawings. In particular they wish to express their

thanks to Dr. F. E. Kester for suggesting the problem, and to Dr. Austin Bailey for the many helpful suggestions which he made, and for his untiring efforts in directing the work.

Blake Physical Laboratory,
University of Kansas.

A P P E N D I X .

Modulus by Bending.

It was at first thought that perhaps a value of Young's modulus might be obtained by means of bending, since the value obtained by W. G. Cady was of the order of, and somewhat near the value accepted for ordinary glass. In order to prepare for a trial of this scheme a preliminary test was made on a piece of glass of approximately the same dimensions as the crystal to be used. Solid supporting knife edges were arranged such that weights might bbe applied and the bending measured by means of an accurate traveling microscope. Figure (13) shows the arrangement of this set up. For calulating the value of Young's modulus the usual formula* was used,

$$M = w \; L^3 / 4 \; b \; d^3 \; B$$

- where (M) is Young's modulus, (w) the force applied, (L) the length, (b) the width, (d) the thickness and (B) the bending observed. It was found that values of Young's modulus gould be obtained which would check within 1% as shown by Table (13).

- - - - - - - - -

* Stewart and Gee, Vol.1, pp. 162-195.

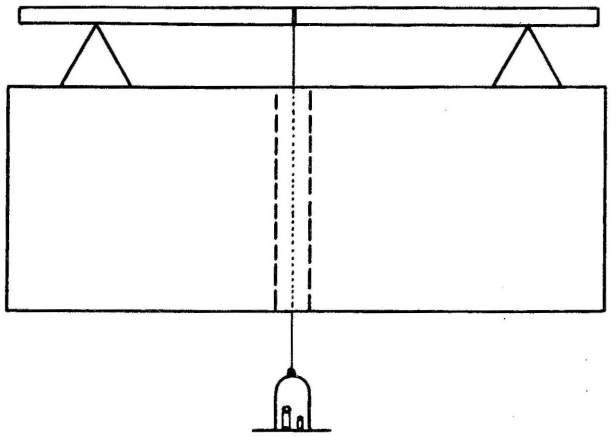

Fig. 13.

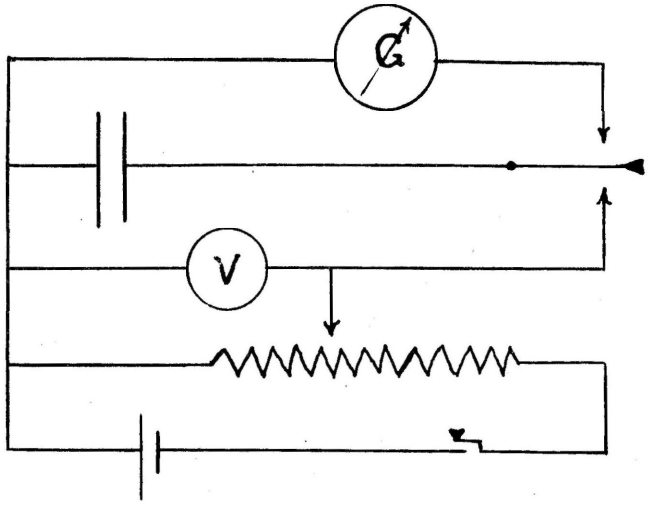

Fig. 14.

A crystal of Rochelle salt was then prepared as specified on page nine of this paper, and placed upon the knife edges. It was found that upon applying a force to the crystal, it showed no appreciable bending before the breaking strength was reached. Since the order of magnitude of the displacement was so small, an interferometer would necessarily have to be used. But since the other data was to be taken for longitudinal compression the interferometer could best be used in directly measuring the compressional displacement.

TABLE (13).

Modulus of Glass.

Length	Width	Thickness	Force	Bending	Modulus.
4.63	2.58	.071	200g.	.0093	5.663×10^{11}
4.10	2.60	.071	500g.	.0159	5.706×10^{11}

Cathode Sputtering.

The mirrors used in the interferometer were made by silvering optical flats by means of cathode sputtering. To do this a silver plate was suspended in a vacuum directly above the piece of glass to be silvered. A glass tube with a piece of platinum wire sealed in the end was inserted through a rubber stopper into the top of the bell jar, and used as the suspension. The bell jar was then set on a metal base and connected to a "Cenco High-Vac" pump. When the pressure was well below one millimeter, a high voltage, direct, interrupted current was sent through by means of a mercury interrupter and induction coil and in such a direction that the silver plate was the cathode. The pressure was lowered until the Crookes' dark space surrounding the cathode just reached the surface of the mirror to be sputtered. The percent of transmission was then determined by means of a photometer.

PLATE I.

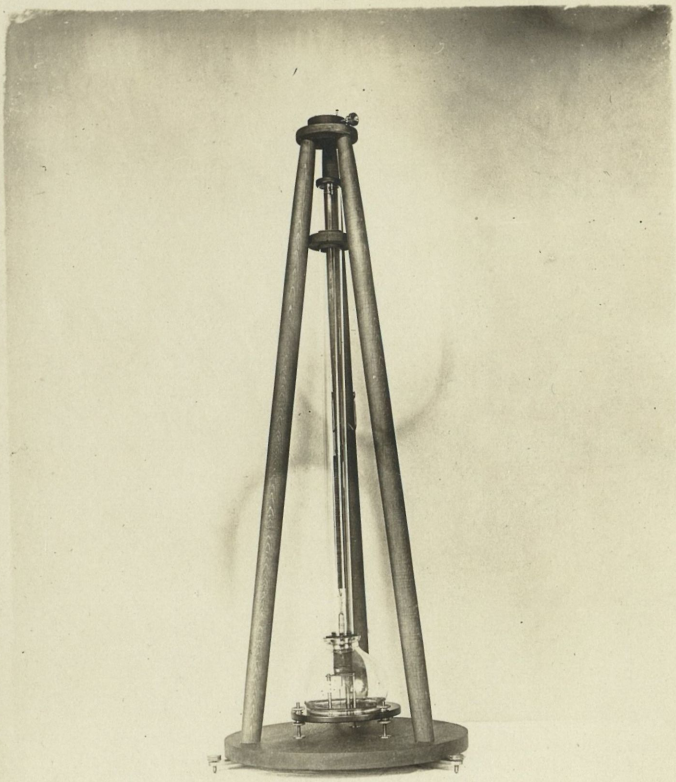

PLATE II.

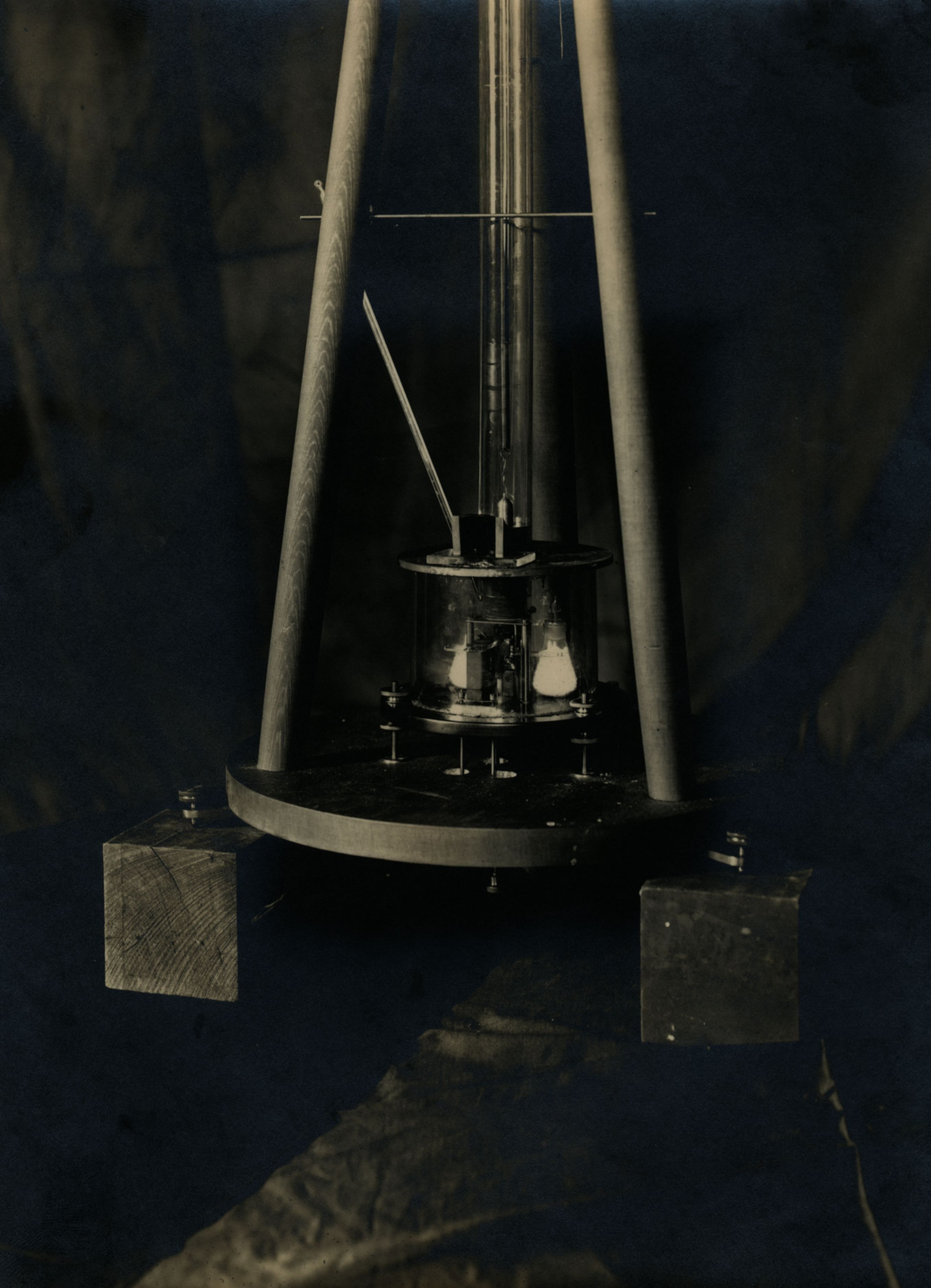

PLATE III.

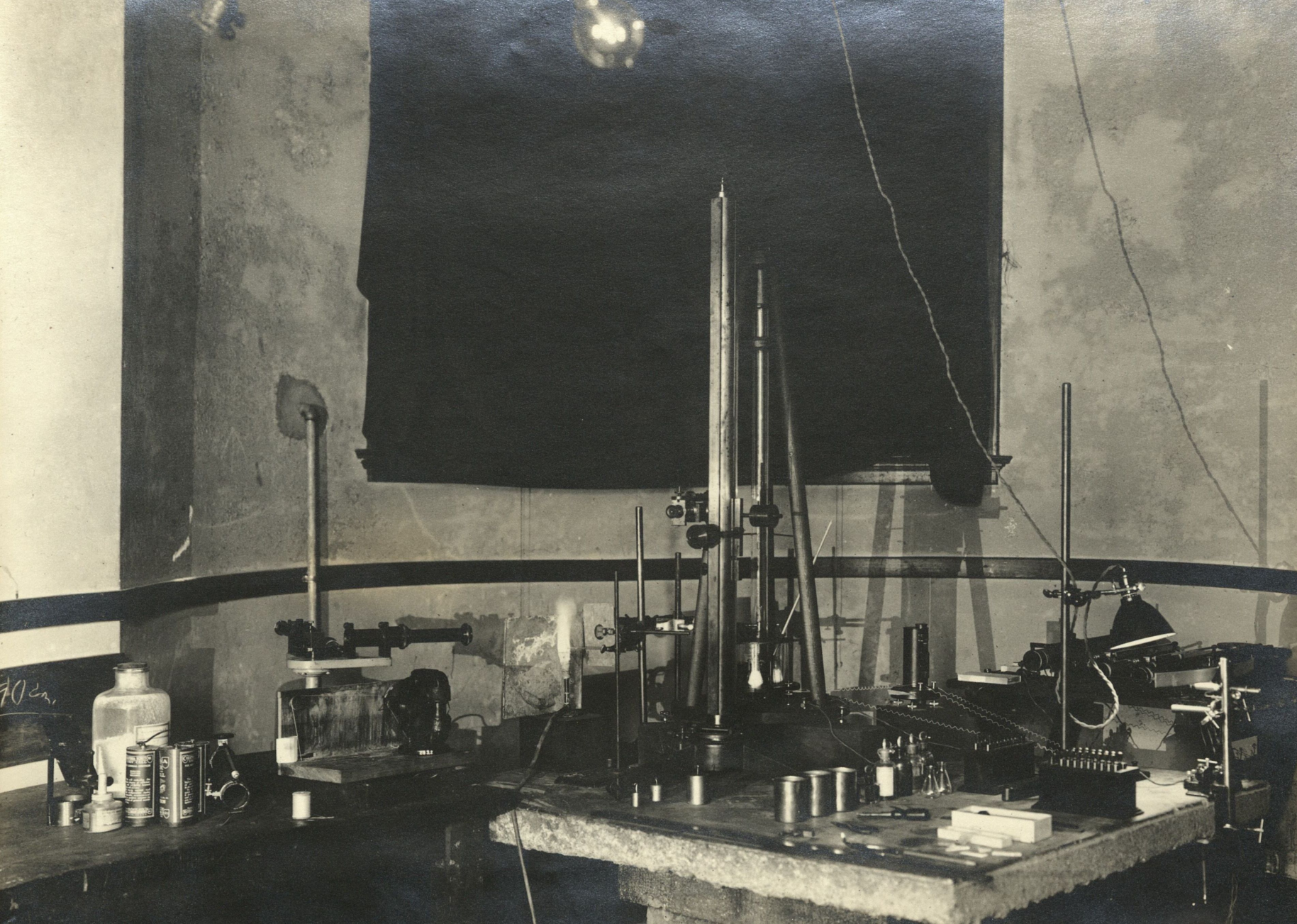
70 cm.

S U P P L E M E N T A R Y N O T E S .